Panasonic ideas for life

For Literature and General Product Information:

United Kingdom/Ireland
Panasonic Industrial Europe GmbH
Willoughby Road
Bracknell Berkshire
RG12 8FP
England
Tel: +44 1344-85 32 60
Fax: +44 1344-85 33 13

Spain
Panasonic Industrial Europe GmbH
Avda. Josep Tarradellas, 20-30, 5°
08029 Barcelona - Spain
Tel: +34 93-494 92 42
Fax: +34 93-419 89 31

France
Panasonic Industrial Europe GmbH
1 – 3 Avenue François Mitterrand
93218 Saint-Denis La Plaine
Tel: +33 1-55 93 67 10
Fax: +33 1-55 93 67 90

Italy
Panasonic Industrial Europe GmbH
Via Lucini 19
20125 Milano
Tel: +39 02-6788-232
Fax: +39 02-6788-207

Germany
(all other european countries)
Panasonic Industrial Europe GmbH
Winsbergring 15
22525 Hamburg
Tel: +49 40-85 386-157
Fax: +49 40-85 386-238

E-mail and Website for all countries:
battery-solutions@panasonic-industrial.com
www.panasonic-industrial.com/batteries

Notice to Readers
It is the responsibility of each user to ensure that every battery application is adequately designed safe and compatible with all conditions encountered during use, and in conformance with existing standards and requirements.

This literature contains information concerning cells and batteries manufactured by Matsushita Battery Industrial Co., Ltd. This information is generally descriptive only and is not intended to make or imply any representation, guarantee or warranty with respect to any cells and batteries. Cell and battery designs are subject to modification without notice.

For more details, please contact:

PANA/HB-VRLA/2005

Panasonic®

Panasonic is a registered trademark of Matsushita Electric Co., Ltd.

© 2005. Printed in Germany. This catalog has been produced using un-chlorinated paper.

Panasonic ideas for life

Valve Regulated Lead-Acid Batteries

Technical Handbook

VRLA

International English

PIE Branch Hamburg

Panasonic Industrial Europe

Find out how we can power your business!

Matsushita Electric Industrial Co. Ltd., founded in Osaka 1918, is one of the world's largest manufacturers of quality electronic and electrical equipment. Its subsidiary, Panasonic Industrial Europe GmbH (PIE) deals with a wide diversified range of industrial products for all European countries. This company was formed in 1998 to strengthen Panasonic's pan-European industry operation, and today is active in such different business fields as Car Electronics, Components, Consumer Batteries, OEM/Industrial Batteries etc. to satisfy its customer's needs.

PIE Organisation

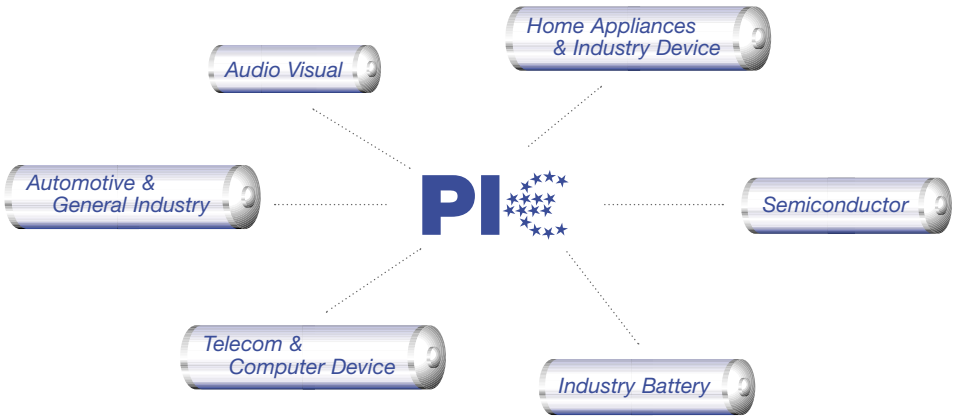

The Industry Battery Unit (IBU) is responsible for the OEM/Industrial Battery business in Europe, with sales offices strategically located throughout the continent. The head office, located in Germany (Hamburg), is responsible for Central Europe (Germany, Benelux, Swiss, Austria, Scandinavia) and Eastern Europe. The UK/Ireland (Bracknell), France (Paris), Italy (Milano) and Spain (Barcelona) are supported by local offices. In addition, we are able to offer an extensive distributor network. Based on both of these sales channels we are capable of supplying each customer's own power solution.

Find out how we can power your business!

We are able to offer you a wide range of individual power solutions for portable and stationary applications. Our product range includes high reliability batteries such as Lithium-Ion, Lithium, Nickel-Metal Hydrid, Nickel-Cadmium, Valve Regulated Lead Acid, Alkaline and Zinc Carbon. Based on this battery range we can power your business in virtually all applications.

Such as:

- ➜ *Mobile Phones* ➜ *Powertools*
- ➜ *UPS* ➜ *Measuring Devices*
- ➜ *Keyless Entry* ➜ *Personal Care*
- ➜ *Vacuum Cleaner*
- ➜ *Medical Equipment*
- ➜ *Electronic toll collect system*
- ➜ *Portable communication devices*
- ➜ *Communication infrastructure*

Quality Commitment

Panasonic Batteries – safety, long-life and power!

Matsushita Batteries Industrial (MBI) started its production of Panasonic batteries in 1931. Today MBI is one of the most diversified global battery manufacturers with a network of 23 manufacturing companies in 15 countries. More than 16,000 employees are dedicated to the invention and development of new batteries for a new world.

VdS

When it comes to production our facilities employ leading edge manufacturing processes meeting the best quality standards. Our factories are certified to ISO standards. This means that each factory has its own quality and environmental management. The ISO 9000 and ISO 14000 series are the minimum benchmarks that ensure our excellent product reliability. In addition our VRLA batteries are for example approved to German VdS standard and U.S. UL standard.

LC-Series

Model Number	Nominal Voltage (V)	Rated Capacity (Ah)	Dimensions (mm)				Mass approx. (kg)	Page	VdS N°
		20 hour rate	L	W	H	TH			
LC-R061R3P	6	1.3	97	24	50	55	0.30	5	–
LC-R063R4P	6	3.4	134	34	60	66	0.62	6	–
LC-R064R5P	6	4.5	70	48	102	108	0.72	7	–
LC-R067R2P	6	7.2	151	34	94	100	1.26	8	–
LC-P067R2P	6	7.2	151	34	94	100	1.30	9	–
LC-R0612P	6	12	151	50	94	100	2.00	10	–
LC-P0612P	6	12	151	50	94	100	2.00	11	–
LC-R121R3P	12	1.3	97	47.5	50	55	0.59	12	G196049
LC-R122R2P	12	2.2	177	34	60	66	0.80	13	G188151
LC-P122R2P	12	2.2	177	34	60	66	0.80	14	–
LC-R123R4P	12	3.4	134	67	60	66	1.20	15	G191053
LC-P123R4P	12	3.4	134	67	60	66	1.20	16	–
LC-R124R5P	12	4.5	70	97	102	108	1.45	17	–
LC-R127R2P	12	7.2	151	64.5	94	100	2.47	18	G193046
LC-P127R2P	12	7.2	151	64.5	94	100	2.50	19	–
LC-RA1212P	12	12	151	98	94	100	3.80	20	G100001
LC-PA1212P1	12	12	151	98	94	100	3.80	21	–
LC-CA1212P	12	12	151	98	94	100	3.80	22	–
LC-RA1215P	12	15	151	98	94	100	4.2	23	–
LC-XD1217P / AP	12	17	181	76	167	167	6.5	24	G104101
LC-X1220P / AP	12	20	181	76	167	167	6.6	25	–
LC-X1224P / AP	12	24	165	125	175	179.5 / 175	9.0	26	G198049
LC-X1228P / AP	12	28	165	125	175	179.5 / 175	11.0	27	–
LC-XC1228P	12	28	165	125	175	179.5	10.0	28	–
LC-R1233P	12	33	195.6	130	155	180	12.0	29	–
LC-X1238P / AP	12	38	197	165	175	180 / 175	13.0	30	G100002
LC-XC1238P	12	38	197	165	175	179.5	15.0	31	–
LC-X1242P / AP	12	42	197	165	175	180 / 175	16.0	32	–
LC-X1265P	12	65	350	166	175	175	20.0	33	G199090
LC-PA1275P	12	75	304	171	200	236	26.6	34	–
LC-XB12100P	12	100	407	173	210	236	37.0	35	–
LC-PD12100P	12	100	407	173	210	236	36.6	36	–

UP-Series

Model Number	Nominal Voltage (V)	Rated Power (W)	Dimensions (mm)				Mass approx. (kg)	Page	VdS N°
		(10 minute rate)	L	W	H	TH			
UP-RW0645P1	6	135	151	34	94	100	1.30	37	–
UP-RW1220P1	12	120	140	38.5	94	100	1.35	38	–
UP-RWA1232P1 / P2	12	192	151	51	94	100	2.00	39	–
UP-RW1245P1	12	270	151	64.5	94	100	2.60	40	–
UP-PW1245P1	12	270	151	64.5	94	100	2.60	41	–

LC-R061R3P

For main and standby power supplies.
Expected trickle life: 6 – 9 years at 20 °C, Approx.

Dimensions (mm)

Terminal type: Faston 187

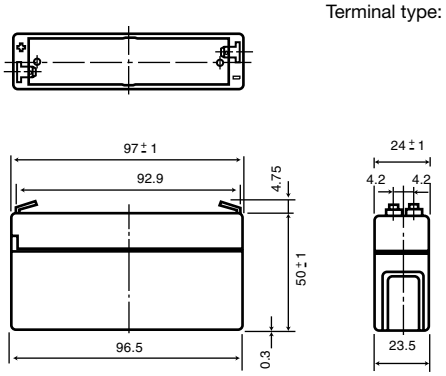

Battery case resin: Standard (UL94HB)

Specifications

Nominal voltage		6 V
Rated capacity (20 hour rate)		1.3 Ah
Dimensions	Length	97 mm
	Width	24 mm
	Height	50 mm
	Total Height	55 mm
Approx. mass		0.3 kg

Characteristics

Capacity (note) (20 °C)	20 hour rate (65 mA) 10 hour rate (120 mA) 5 hour rate (210 mA) 1 hour rate (850 mA)	1.30 Ah 1.20 Ah 1.05 Ah 0.85 Ah
	1.5 hour rate discharge Cut-off voltage 5.25 V	0.6 A
Internal resistance	Fully charged battery (20 °C)	Approx. 50 mΩ
Temperature dependency of capacity (20 hour rate)	40 °C 20 °C 0 °C -15 °C	102 % 100 % 85 % 65 %
Self discharge (20 °C)	Residual capacity after standing 3 months Residual capacity after standing 6 months Residual capacity after standing 12 months	91 % 83 % 66 %

(Note) The above characteristics data are average values obtained within three charge/discharge cycles, not the minimum values.

Discharge characteristics (20 °C) (Note)

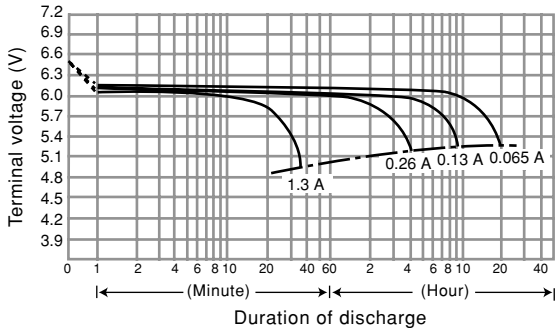

Duration of discharge vs. Discharge current (Note)

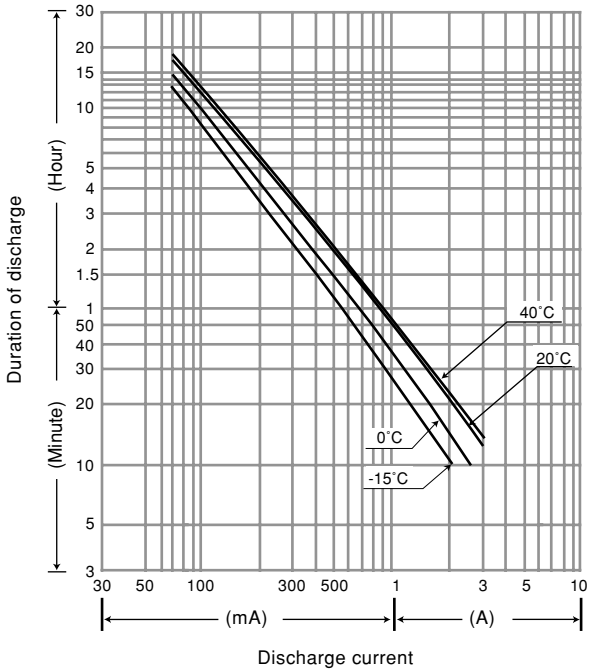

LC-R063R4P

For main and standby power supplies.
Trickle Design life: 6 – 9 years at 20 °C

Dimensions (mm)

Terminal type: Faston 187

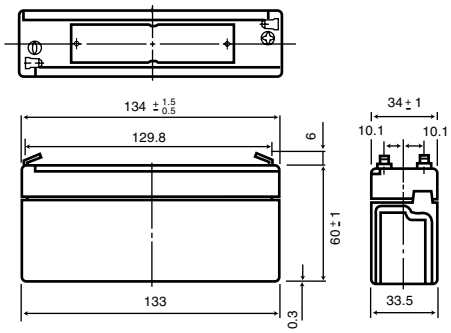

Battery case resin: Standard (UL94HB)

Specifications

Nominal voltage		6 V
Rated capacity (20 hour rate)		3.4 Ah
Dimensions	Length	134 mm
	Width	34 mm
	Height	60 mm
	Total Height	66 mm
Approx. mass		0.62 kg

Characteristics

Capacity (note) (20 °C)	20 hour rate (170 mA) 10 hour rate (300 mA) 5 hour rate (540 mA) 1 hour rate (2100 mA)	3.40 Ah 3.00 Ah 2.70 Ah 2.10 Ah
	1.5 hour rate discharge Cut-off voltage 5.25 V	1.5 A
Internal resistance	Fully charged battery (20 °C)	Approx. 30 mΩ
Temperature dependency of capacity (20 hour rate)	40 °C 20 °C 0 °C -15 °C	102 % 100 % 85 % 65 %
Self discharge (20 °C)	Residual capacity after standing 3 months Residual capacity after standing 6 months Residual capacity after standing 12 months	91 % 83 % 66 %

(Note) The above characteristics data are average values obtained within three charge/discharge cycles, not the minimum values.

Discharge characteristics (20 °C) (Note)

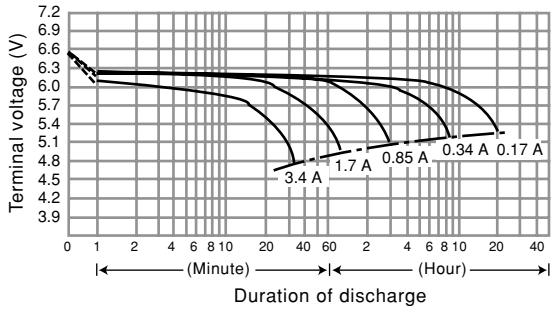

Duration of discharge vs. Discharge current (Note)

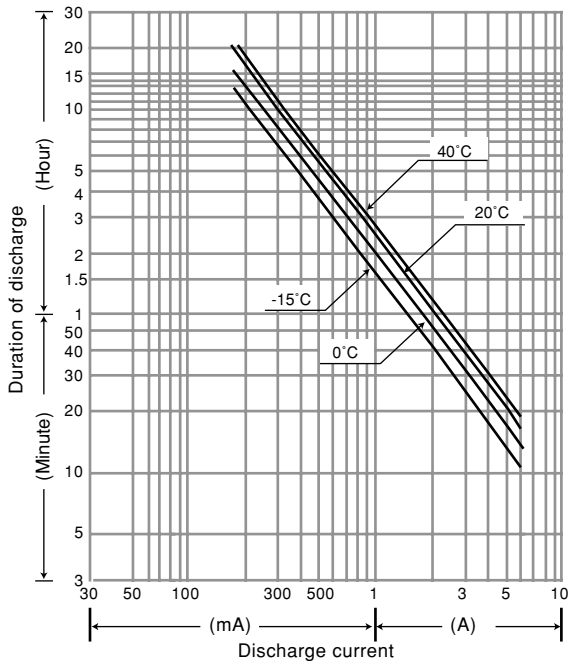

LC-R064R5P

For main and standby power supplies.
Expected trickle life: 6 – 9 years at 20 °C.

Dimensions (mm)

Terminal type: Faston 187

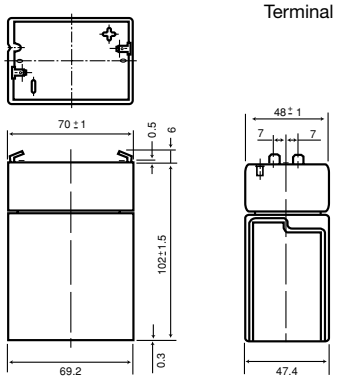

Battery case resin: Standard (UL94HB)

Specifications

Nominal voltage		6 V
Rated capacity (20 hour rate)		4.5 Ah
Dimensions	Length	70 mm
	Width	48 mm
	Height	102 mm
	Total Height	108 mm
Approx. mass		0.72 kg

Characteristics

Capacity (note) (20 °C)	20 hour rate (225 mA) 10 hour rate (400 mA) 5 hour rate (720 mA) 1 hour rate (2800 mA)	4.5 Ah 4.0 Ah 3.6 Ah 2.8 Ah
	1.5 hour rate discharge Cut-off voltage 10.5 V	2.2 A
Internal resistance	Fully charged battery (20 °C)	Approx. 20 mΩ
Temperature dependency of capacity (20 hour rate)	40 °C 20 °C 0 °C -15 °C	102 % 100 % 85 % 65 %
Self discharge (20 °C)	Residual capacity after standing 3 months Residual capacity after standing 6 months Residual capacity after standing 12 months	91 % 83 % 66 %

(Note) The above characteristics data are average values obtained within three charge/discharge cycles, not the minimum values.

Discharge characteristics (20 °C) (Note)

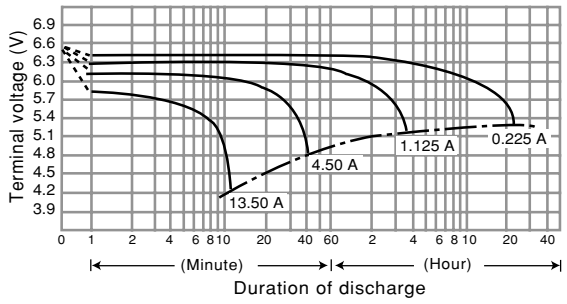

Duration of discharge vs. Discharge current (Note)

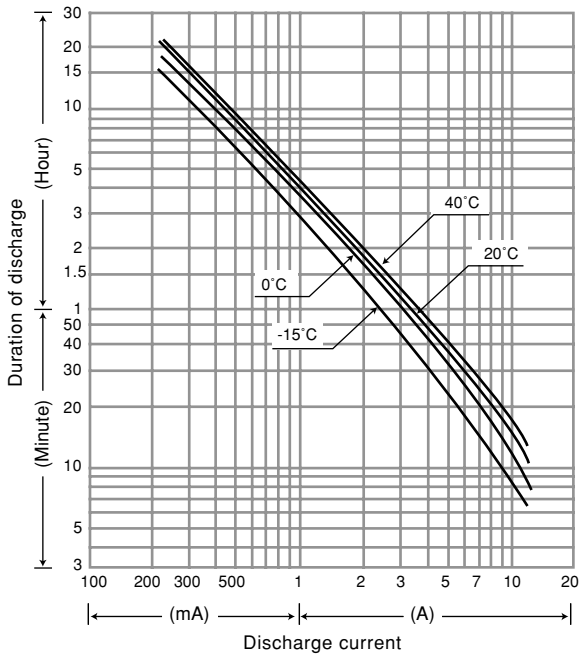

LC-R067R2P

For main and standby power supplies.
Trickle Design life: 6 – 9 years at 20 °C.

Dimensions (mm)

Terminal type: Faston 187 or Faston 250 with hole

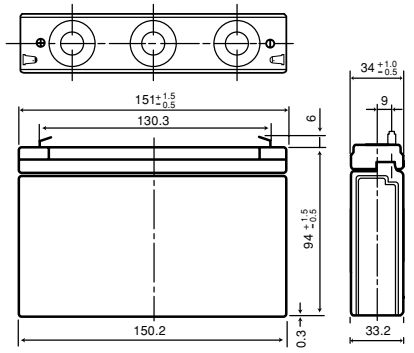

Battery case resin: Standard (UL94HB)

Specifications

Nominal voltage		6 V
Rated capacity (20 hour rate)		7.2 Ah
Dimensions	Length	151 mm
	Width	34 mm
	Height	94 mm
	Total Height	100 mm
Approx. mass		1.26 kg

Characteristics

Capacity (note) (20 °C)	20 hour rate (360 mA) 10 hour rate (680 mA) 5 hour rate (1260 mA) 1 hour rate (4900 mA)	7.2 Ah 6.8 Ah 6.3 Ah 4.9 Ah
	1.5 hour rate discharge Cut-off voltage 5.25 V	3.5 A
Internal resistance	Fully charged battery (20 °C)	Approx. 20 mΩ
Temperature dependency of capacity (20 hour rate)	40 °C 20 °C 0 °C -15 °C	102 % 100 % 85 % 65 %
Self discharge (20 °C)	Residual capacity after standing 3 months Residual capacity after standing 6 months Residual capacity after standing 12 months	91 % 83 % 66 %

(Note) The above characteristics data are average values obtained within three charge/discharge cycles, not the minimum values.

Discharge characteristics (20 °C) (Note)

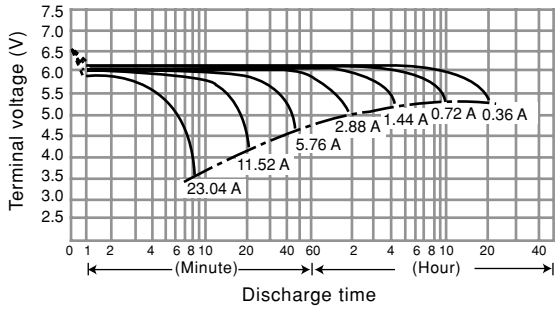

Duration of discharge vs. Discharge current (Note)

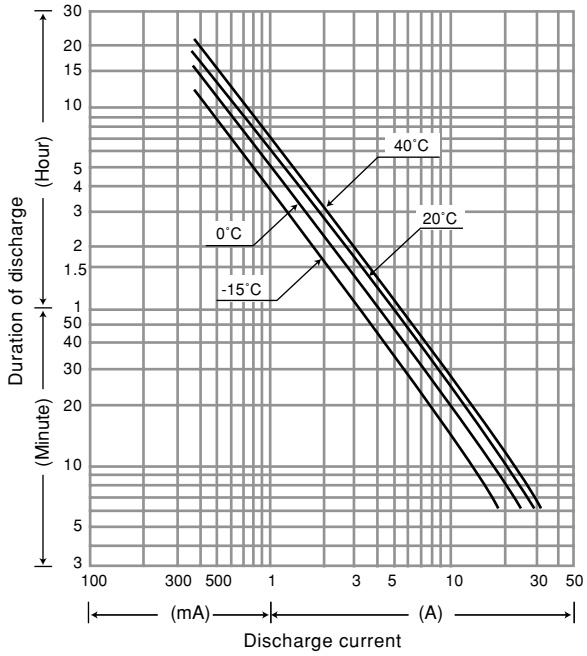

LC-P067R2P

For standby power supplies.
Trickle Design life: 10 – 12 years at 20 °C.

Dimensions (mm)

Terminal type: Faston 187

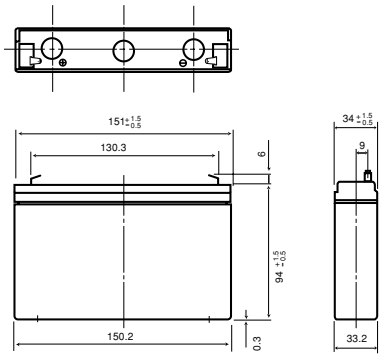

Battery case resin: Flame-retardant (UL94V-0)

Specifications

Nominal voltage		6 V
Rated capacity (20 hour rate)		7.2 Ah
Dimensions	Length	151 mm
	Width	34 mm
	Height	94 mm
	Total Height	100 mm
Approx. mass		1.3 kg

The total height of #250 terminal is 101.5 mm.

Characteristics

Capacity (note) (20 °C)	20 hour rate (360 mA) 10 hour rate (680 mA) 5 hour rate (1260 mA) 1 hour rate (4900 mA)	7.2 Ah 6.8 Ah 6.3 Ah 4.9 Ah
	1.5 hour rate discharge Cut-off voltage 5.25 V	3.5 A
Internal resistance	Fully charged battery (20 °C)	Approx. 20 mΩ
Temperature dependency of capacity (20 hour rate)	40 °C 20 °C 0 °C -15 °C	102 % 100 % 85 % 65 %
Self discharge (20 °C)	Residual capacity after standing 3 months Residual capacity after standing 6 months Residual capacity after standing 12 months	91 % 83 % 66 %

(Note) The above characteristics data are average values obtained within three charge/discharge cycles, not the minimum values.
(Note) For cycle use of the battery, please contact us in advance.

Discharge characteristics (20 °C) (Note)

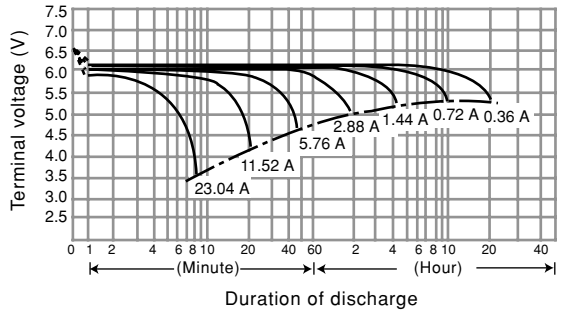

Duration of discharge vs. Discharge current (Note)

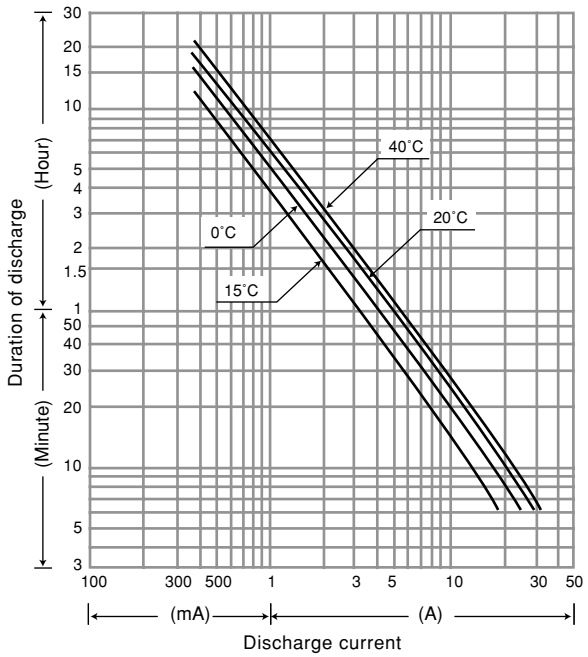

LC-R0612P

For standby power supplies.
Trickle Design life: 6 – 9 years at 20 °C.

Dimensions (mm)

Terminal type: Faston 187 or Faston 250 with hole

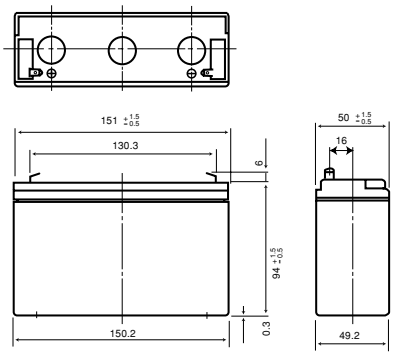

Battery case resin: Standard (UL94HB)

Specifications

Nominal voltage		6 V
Rated capacity (20 hour rate)		12 Ah
Dimensions	Length	151 mm
	Width	50 mm
	Height	94 mm
	Total Height	100 mm
Approx. mass		2 kg

The total height of #250 terminal is 101.5 mm.

Characteristics

Capacity (note) (20 °C)	20 hour rate (600 mA) 10 hour rate (1130 mA) 5 hour rate (2080 mA) 1 hour rate (8100 mA)	12.0 Ah 11.3 Ah 10.4 Ah 8.1 Ah
	1.5 hour rate discharge Cut-off voltage 5.25 V	5.8 A
Internal resistance	Fully charged battery (20 °C)	Approx. 15 mΩ
Temperature dependency of capacity (20 hour rate)	40 °C 20 °C 0 °C -15 °C	102 % 100 % 85 % 65 %
Self discharge (20 °C)	Residual capacity after standing 3 months Residual capacity after standing 6 months Residual capacity after standing 12 months	91 % 83 % 66 %

(Note) The above characteristics data are average values obtained within three charge/discharge cycles, not the minimum values.

Discharge characteristics (20 °C) (Note)

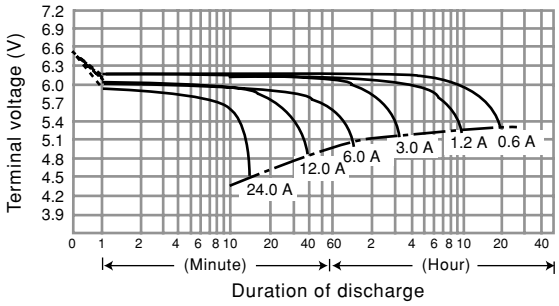

Duration of discharge vs. Discharge current (Note)

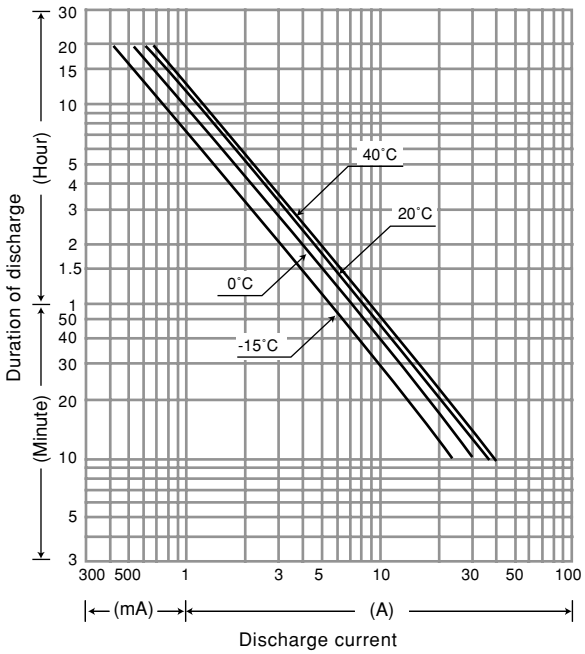

LC-P0612P

For standby power supplies.
Trickle Design life: 10 – 12 years at 20 °C.

Dimensions (mm)

Terminal type: Faston 187 or Faston 250 with hole

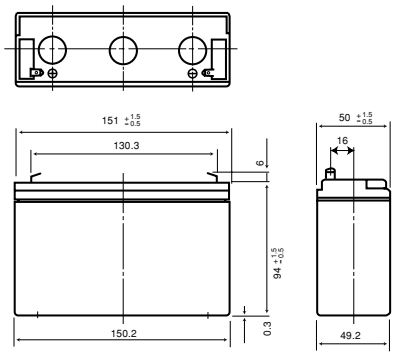

Battery case resin: Flame-retardant (UL94V-0)

Specifications

Nominal voltage		6 V
Rated capacity (20 hour rate)		12 Ah
Dimensions	Length	151 mm
	Width	50 mm
	Height	94 mm
	Total Height	100 mm
Approx. mass		2 kg

The total height of #250 terminal is 101.5 mm.

Characteristics

Capacity (note) (20 °C)	20 hour rate (600 mA) 10 hour rate (1130 mA) 5 hour rate (2080 mA) 1 hour rate (8100 mA)	12.0 Ah 11.3 Ah 10.4 Ah 8.1 Ah
	1.5 hour rate discharge Cut-off voltage 5.25 V	5.8 A
Internal resistance	Fully charged battery (20 °C)	Approx. 15 mΩ
Temperature dependency of capacity (20 hour rate)	40 °C 20 °C 0 °C -15 °C	102 % 100 % 85 % 65 %
Self discharge (20 °C)	Residual capacity after standing 3 months Residual capacity after standing 6 months Residual capacity after standing 12 months	91 % 83 % 66 %

(Note) The above characteristics data are average values obtained within three charge/discharge cycles, not the minimum values.
(Note) For cycle use of the battery, please contact us in advance.

Discharge characteristics (20 °C) (Note)

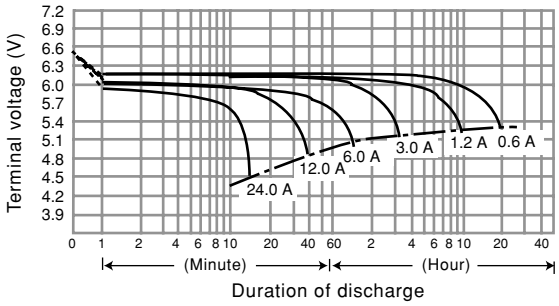

Duration of discharge vs. Discharge current (Note)

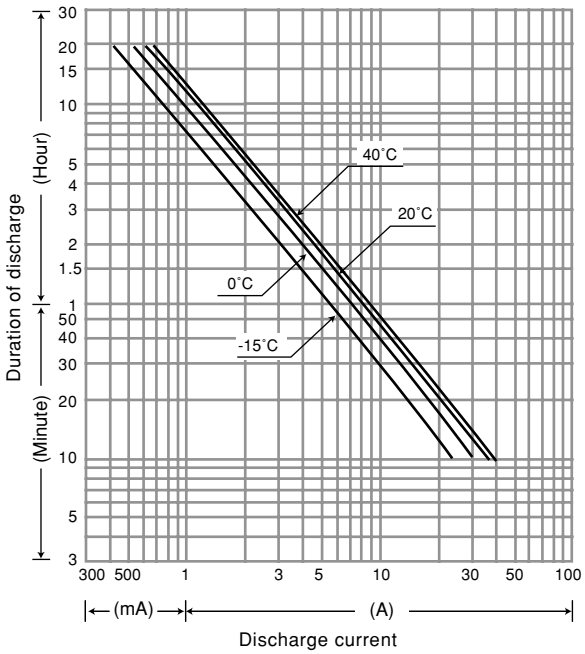

LC-R121R3P

For main and standby power supplies.
Expected trickle life: 6 – 9 years at 20 °C, Approx.

VdS

Dimensions (mm)

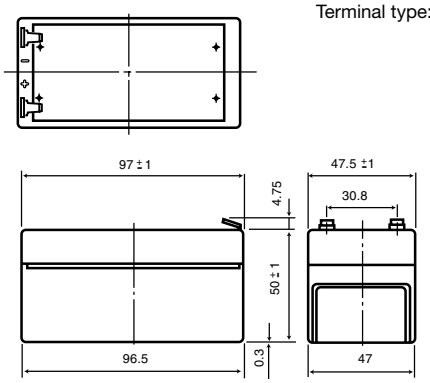

Specifications

Nominal voltage		12 V
Rated capacity (20 hour rate)		1.3 Ah
Dimensions	Length	97 mm
	Width	47.5 mm
	Height	50 mm
	Total Height	55 mm
Approx. mass		0.59 kg

Characteristics

Capacity (note) (20 °C)	20 hour rate (65 mA) 10 hour rate (120 mA) 5 hour rate (210 mA) 1 hour rate (850 mA)	1.30 Ah 1.20 Ah 1.05 Ah 0.85 Ah
	1.5 hour rate discharge Cut-off voltage 10.5 V	0.6 A
Internal resistance	Fully charged battery (20 °C)	Approx. 90 mΩ
Temperature dependency of capacity (20 hour rate)	40 °C 20 °C 0 °C -15 °C	102 % 100 % 85 % 65 %
Self discharge (20 °C)	Residual capacity after standing 3 months Residual capacity after standing 6 months Residual capacity after standing 12 months	91 % 83 % 66 %

(Note) The above characteristics data are average values obtained within three charge/discharge cycles, not the minimum values.

Discharge characteristics (20 °C) (Note)

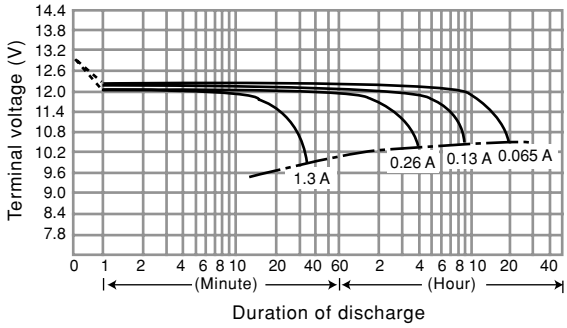

Duration of discharge vs. Discharge current (Note)

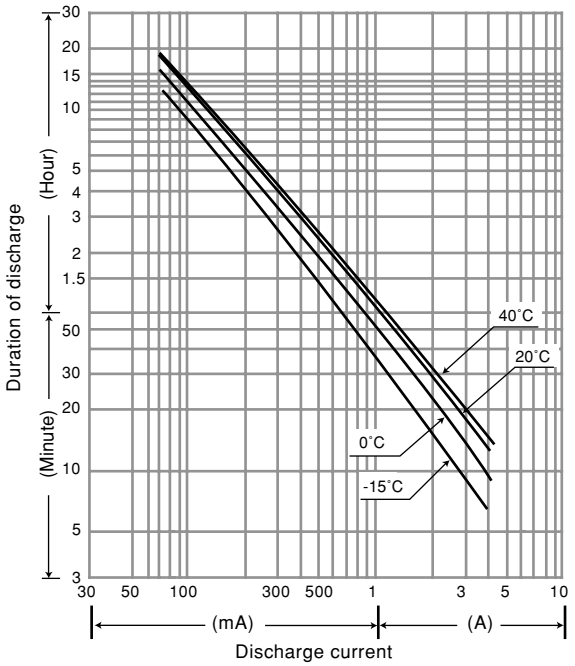

LC-R122R2P

For main and standby power supplies.
Trickle Design life: 6 – 9 years at 20 °C.

VdS

Dimensions (mm)

Terminal type: Faston 187

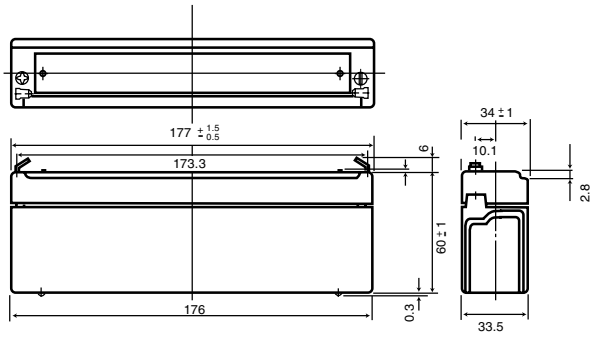

Battery case resin: Standard (UL94HB)

Specifications

Nominal voltage		12 V
Rated capacity (20 hour rate)		2.2 Ah
Dimensions	Length	177 mm
	Width	34 mm
	Height	60 mm
	Total Height	66 mm
Approx. mass		0.8 kg

Characteristics

Capacity (note) (20 °C)	20 hour rate (110 mA) 10 hour rate (200 mA) 5 hour rate (360 mA) 1 hour rate (1300 mA)	2.2 Ah 2.0 Ah 1.8 Ah 1.3 Ah
	1.5 hour rate discharge Cut-off voltage 10.5 V	0.95 A
Internal resistance	Fully charged battery (20 °C)	Approx. 70 mΩ
Temperature dependency of capacity (20 hour rate)	40 °C 20 °C 0 °C -15 °C	102 % 100 % 85 % 65 %
Self discharge (20 °C)	Residual capacity after standing 3 months Residual capacity after standing 6 months Residual capacity after standing 12 months	91 % 83 % 66 %

(Note) The above characteristics data are average values obtained within three charge/discharge cycles, not the minimum values.

Discharge characteristics (20 °C) (Note)

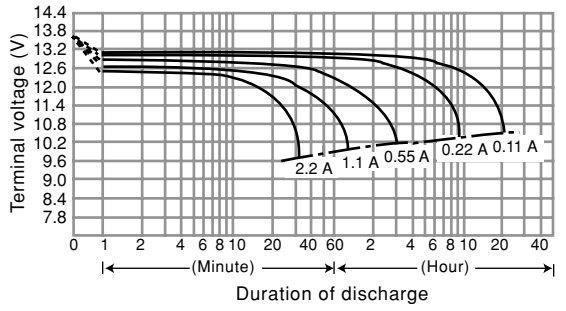

Duration of discharge vs. Discharge current (Note)

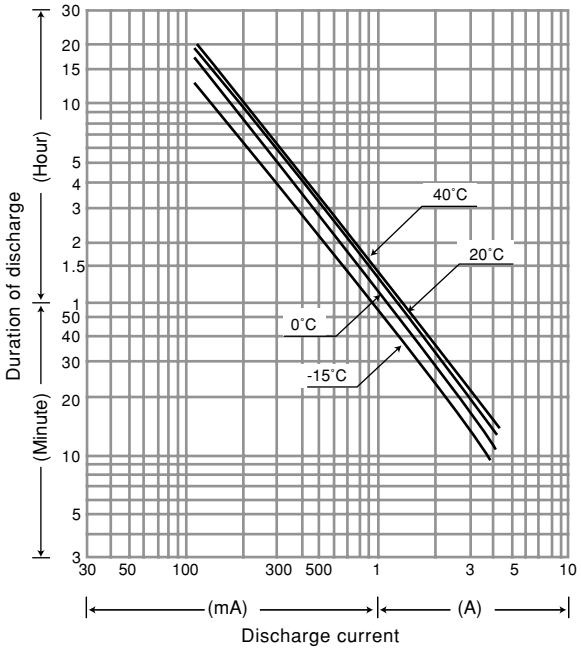

LC-P122R2P

For standby power supplies.
Expected trickle life: Approx. 10 – 12 years at 20 °C.

Dimensions (mm)

Terminal type: Faston 187

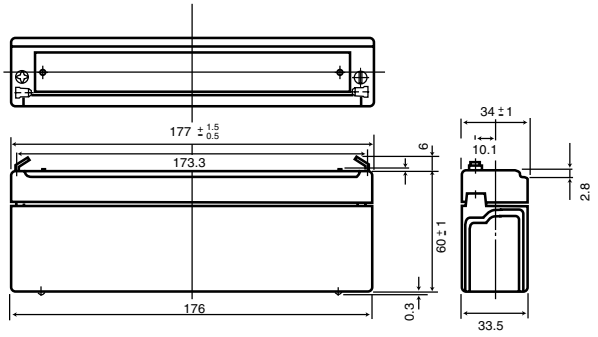

Battery case resin: Flame-retardant (UL94V-0)

Specifications

Nominal voltage		12 V
Rated capacity (20 hour rate)		2.2 Ah
Dimensions	Length	177 mm
	Width	34 mm
	Height	60 mm
	Total Height	66 mm
Approx. mass		0.8 kg

Characteristics

Capacity (note) (20 °C)	20 hour rate (110 mA) 10 hour rate (200 mA) 5 hour rate (360 mA) 1 hour rate (1300 mA)	2.2 Ah 2.0 Ah 1.8 Ah 1.3 Ah
	1.5 hour rate discharge Cut-off voltage 10.5 V	0.95 A
Internal resistance	Fully charged battery (20 °C)	Approx. 70 mΩ
Temperature dependency of capacity (20 hour rate)	40 °C 20 °C 0 °C -15 °C	102 % 100 % 85 % 65 %
Self discharge (20 °C)	Residual capacity after standing 3 months Residual capacity after standing 6 months Residual capacity after standing 12 months	91 % 83 % 66 %

(Note) The above characteristics data are average values obtained within three charge/discharge cycles, not the minimum values.

Discharge characteristics (20 °C) (Note)

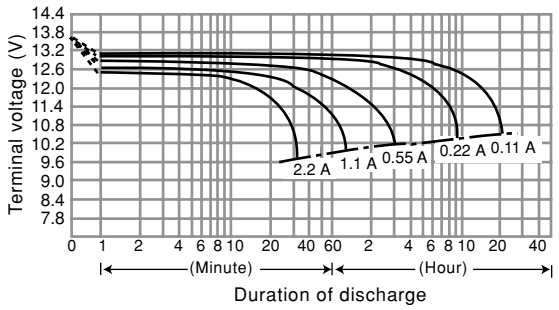

Duration of discharge vs. Discharge current (Note)

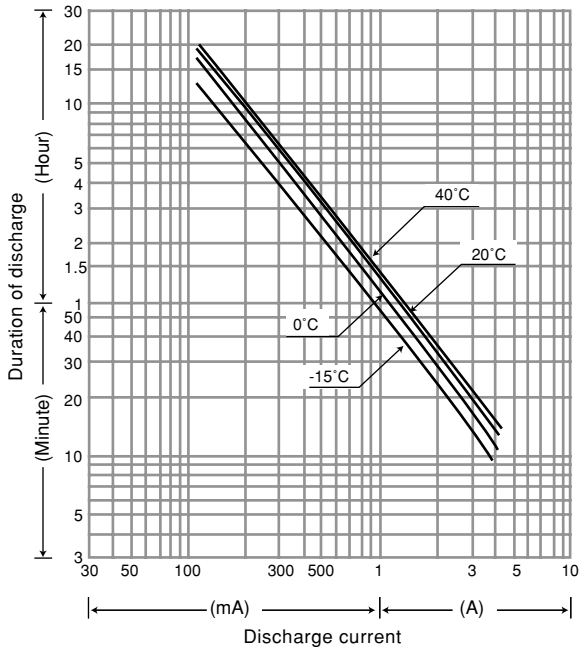

LC-R123R4P

For main and standby power supplies.
Trickle Design life: 6 – 9 years at 20 °C.

VdS

Dimensions (mm)

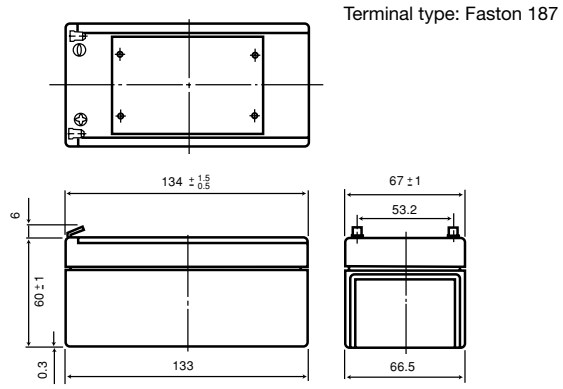

Battery case resin: Standard (UL94HB)

Specifications

Nominal voltage		12 V
Rated capacity (20 hour rate)		3.4 Ah
Dimensions	Length	134 mm
	Width	67 mm
	Height	60 mm
	Total Height	66 mm
Approx. mass		1.2 kg

Characteristics

Capacity (note) (20 °C)	20 hour rate (170 mA) 10 hour rate (300 mA) 5 hour rate (540 mA) 1 hour rate (2100 mA)	3.4 Ah 3.0 Ah 2.7 Ah 2.1 Ah
	1.5 hour rate discharge Cut-off voltage 10.5 V	1.5 A
Internal resistance	Fully charged battery (20 °C)	Approx. 60 mΩ
Temperature dependency of capacity (20 hour rate)	40 °C 20 °C 0 °C -15 °C	102 % 100 % 85 % 65 %
Self discharge (20 °C)	Residual capacity after standing 3 months Residual capacity after standing 6 months Residual capacity after standing 12 months	91 % 83 % 66 %

(Note) The above characteristics data are average values obtained within three charge/discharge cycles, not the minimum values.

Discharge characteristics (20 °C) (Note)

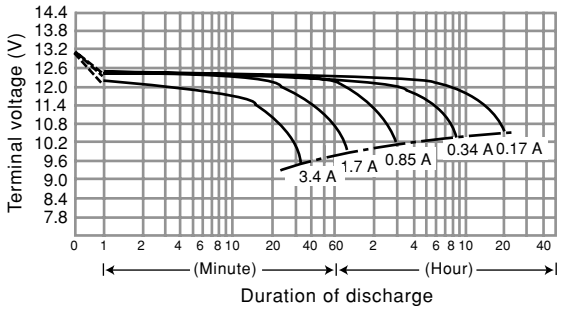

Duration of discharge vs. Discharge current (Note)

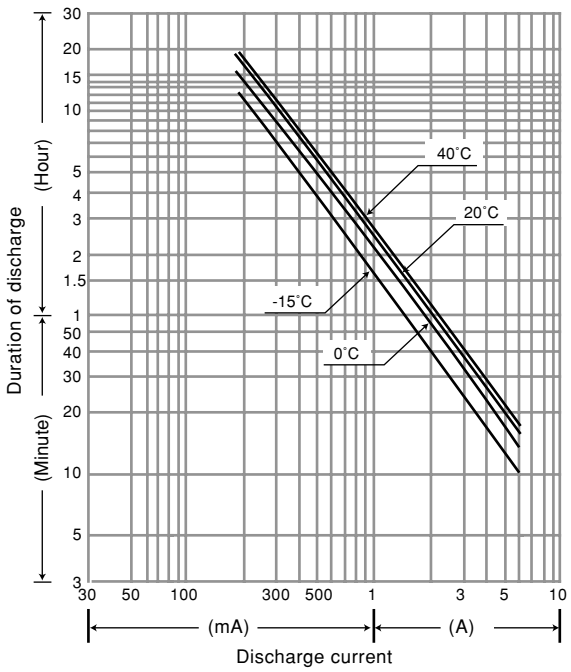

LC-P123R4P

For standby power supplies.
Expected trickle life: Approx. 10 – 12 years at 20 °C.

Dimensions (mm)

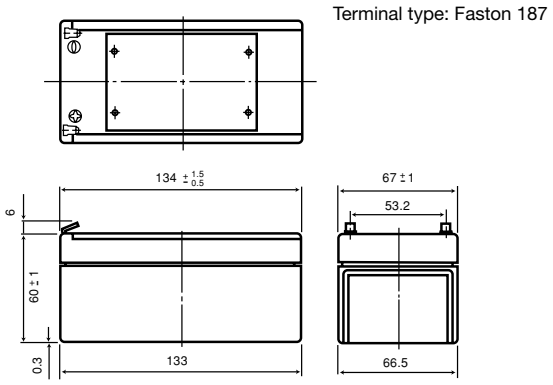

Battery case resin: Flame-retardant (UL94V-0)

Specifications

Nominal voltage		12 V
Rated capacity (20 hour rate)		3.4 Ah
Dimensions	Length	134 mm
	Width	67 mm
	Height	60 mm
	Total Height	66 mm
Approx. mass		1.2 kg

Characteristics

Capacity (note) (20 °C)	20 hour rate (170 mA) 10 hour rate (300 mA) 5 hour rate (540 mA) 1 hour rate (2100 mA)	3.4 Ah 3.0 Ah 2.7 Ah 2.1 Ah
	1.5 hour rate discharge Cut-off voltage 10.5 V	1.5 A
Internal resistance	Fully charged battery (20 °C)	Approx. 60 mΩ
Temperature dependency of capacity (20 hour rate)	40 °C 20 °C 0 °C -15 °C	102 % 100 % 85 % 65 %
Self discharge (20 °C)	Residual capacity after standing 3 months Residual capacity after standing 6 months Residual capacity after standing 12 months	91 % 83 % 66 %

(Note) The above characteristics data are average values obtained within three charge/discharge cycles, not the minimum values.

Discharge characteristics (20 °C) (Note)

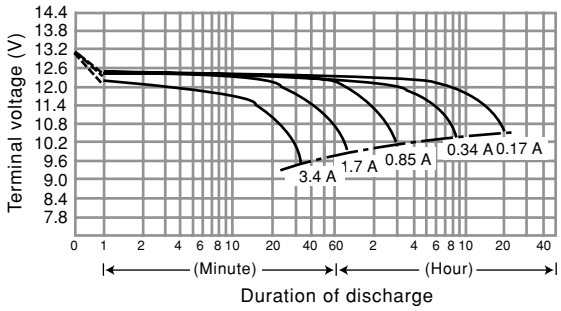

Duration of discharge vs. Discharge current (Note)

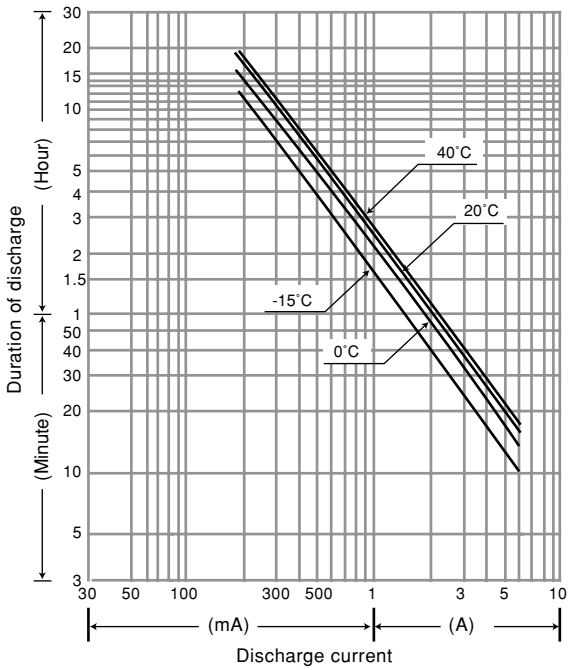

LC-R124R5P

For main and standby power supplies.
Trickle Design life: 6 – 9 years at 20 °C.

Dimensions (mm)

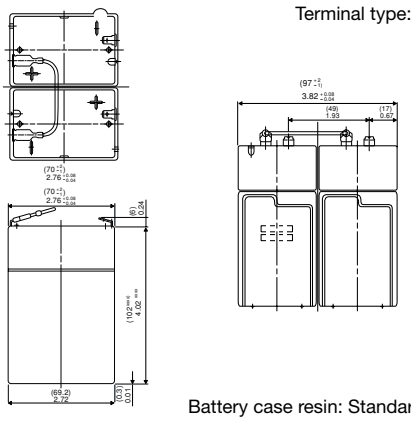

Specifications

Nominal voltage		12 V
Rated capacity (20 hour rate)		4.5 Ah
Dimensions	Length	70 mm
	Width	97 mm
	Height	102 mm
	Total Height	108 mm
Approx. mass		1.45 kg

Characteristics

Capacity (note) (20 °C)	20 hour rate (210 mA) 10 hour rate (390 mA) 5 hour rate (700 mA) 1 hour rate (2800 mA)	4.5 Ah 3.9 Ah 3.5 Ah 2.8 Ah
	1.5 hour rate discharge Cut-off voltage 5.25 V	2.2 A
Internal resistance	Fully charged battery (20 °C)	Approx. 40 mΩ
Temperature dependency of capacity (20 hour rate)	40 °C 20 °C 0 °C -15 °C	102 % 100 % 85 % 65 %
Self discharge (20 °C)	Residual capacity after standing 3 months Residual capacity after standing 6 months Residual capacity after standing 12 months	91 % 83 % 66 %

(Note) The above characteristics data are average values obtained within three charge/discharge cycles, not the minimum values.

Discharge characteristics (20 °C) (Note)

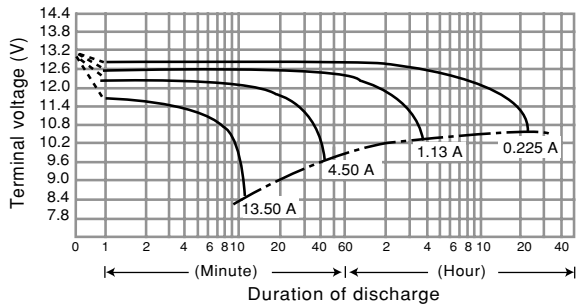

Duration of discharge vs. Discharge current (Note)

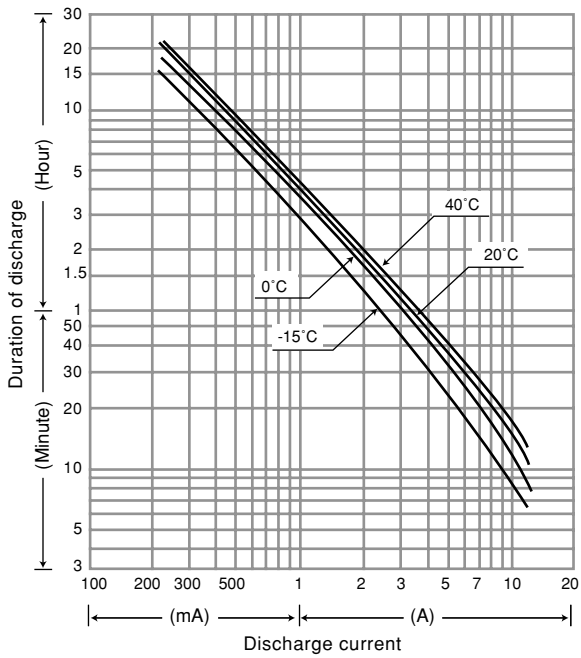

LC-R127R2P

For main and standby power supplies.
Trickle Design life: 6 – 9 years at 20 °C.

VdS

Dimensions (mm)

Terminal type: Faston 187 or Faston 250 with hole

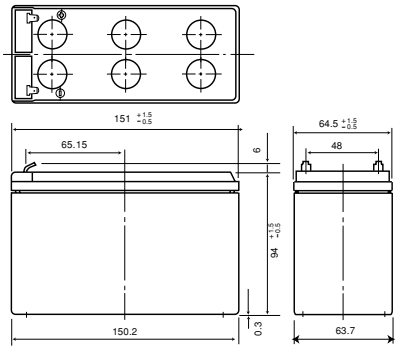

Battery case resin: Standard (UL94HB)

Specifications

Nominal voltage		12 V
Rated capacity (20 hour rate)		7.2 Ah
Dimensions	Length	151 mm
	Width	64.5 mm
	Height	94 mm
	Total Height	100 mm
Approx. mass		2.5 kg

The total height of #250 terminal is 101.5 mm.

Characteristics

Capacity (note) (20 °C)	20 hour rate (360 mA) 10 hour rate (680 mA) 5 hour rate (1260 mA) 1 hour rate (4900 mA)	7.2 Ah 6.8 Ah 6.3 Ah 4.9 Ah
	1.5 hour rate discharge Cut-off voltage 10.5 V	3.5 A
Internal resistance	Fully charged battery (20 °C)	Approx. 40 mΩ
Temperature dependency of capacity (20 hour rate)	40 °C 20 °C 0 °C -15 °C	102 % 100 % 85 % 65 %
Self discharge (20 °C)	Residual capacity after standing 3 months Residual capacity after standing 6 months Residual capacity after standing 12 months	91 % 83 % 66 %

(Note) The above characteristics data are average values obtained within three charge/discharge cycles, not the minimum values.

Discharge characteristics (20 °C) (Note)

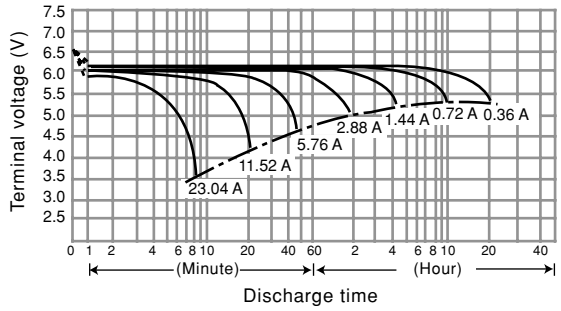

Duration of discharge vs. Discharge current (Note)

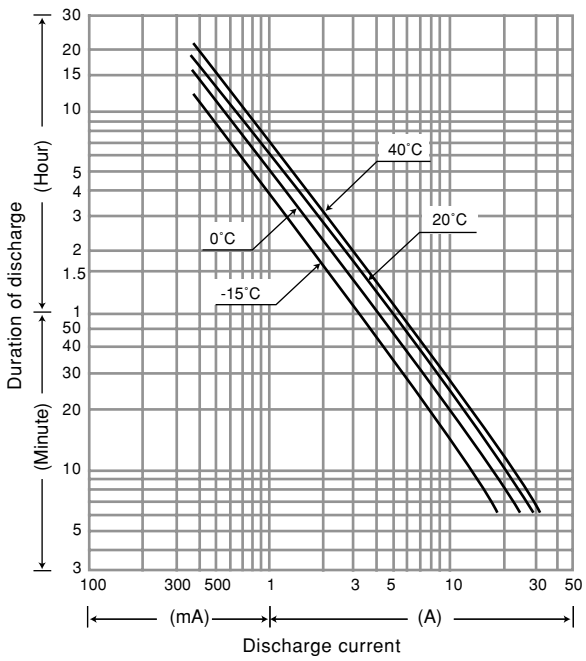

LC-P127R2P

For standby power supplies.
Trickle Design life: 10 – 12 years at 20 °C.

Dimensions (mm)

Terminal type: Faston 187 or Faston 250 with hole

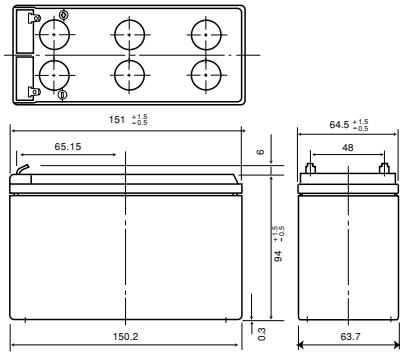

Battery case resin: Flame-retardant (UL94V-0)

Specifications

Nominal voltage		12 V
Rated capacity (20 hour rate)		7.2 Ah
Dimensions	Length	151 mm
	Width	64.5 mm
	Height	94 mm
	Total Height	100 mm
Approx. mass		2.5 kg

The total height of #250 terminal is 101.5 mm.

Characteristics

Capacity (note) (20 °C)	20 hour rate (360 mA) 10 hour rate (680 mA) 5 hour rate (1260 mA) 1 hour rate (4900 mA)	7.2 Ah 6.8 Ah 6.3 Ah 4.9 Ah
	1.5 hour rate discharge Cut-off voltage 10.5 V	3.5 A
Internal resistance	Fully charged battery (20 °C)	Approx. 40 mΩ
Temperature dependency of capacity (20 hour rate)	40 °C 20 °C 0 °C -15 °C	102 % 100 % 85 % 65 %
Self discharge (20 °C)	Residual capacity after standing 3 months Residual capacity after standing 6 months Residual capacity after standing 12 months	91 % 83 % 66 %

(Note) The above characteristics data are average values obtained within three charge/discharge cycles, not the minimum values.
(Note) For cycle use of the battery, please contact us in advance.

Discharge characteristics (20 °C) (Note)

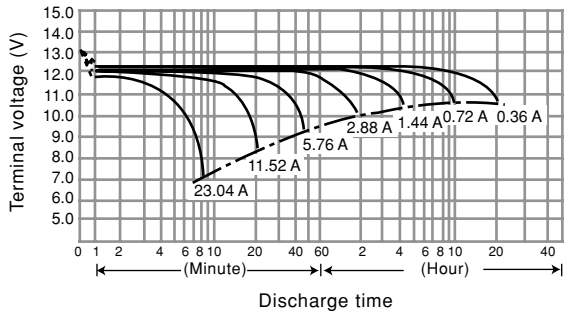

Duration of discharge vs. Discharge current (Note)

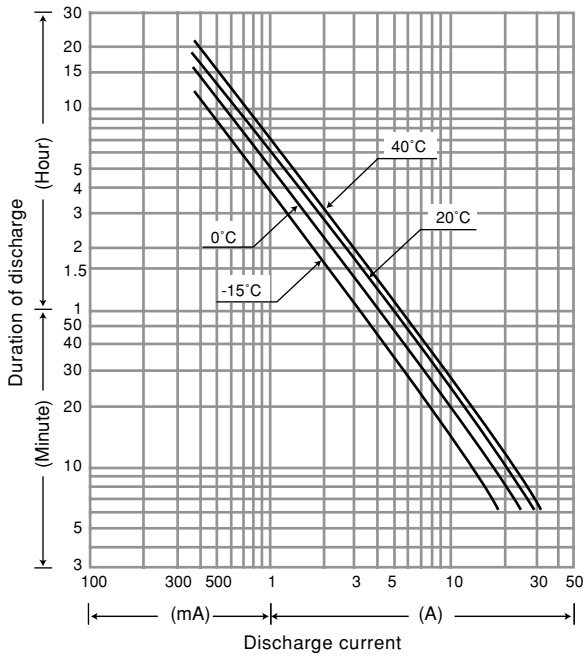

LC-RA1212P

For main and standby power supplies.
Trickle Design life: 6 – 9 years at 20 °C.

VdS

Dimensions (mm)

Terminal type: Faston 187 or Faston 250 with hole

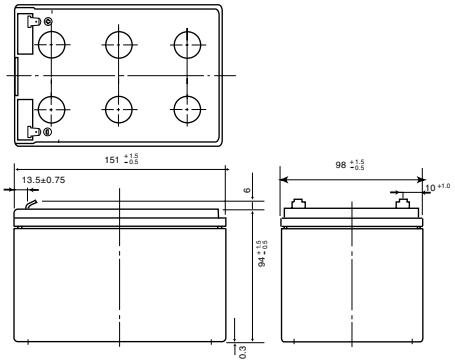

Battery case resin: Standard (UL94HB)

Specifications

Nominal voltage		12 V
Rated capacity (20 hour rate)		12 Ah
Dimensions	Length	151 mm
	Width	98 mm
	Height	94 mm
	Total Height	100 mm
Approx. mass		3.8 kg

Characteristics

Capacity (note) (20 °C)	20 hour rate (600 mA) 10 hour rate (1130 mA) 5 hour rate (2080 mA) 1 hour rate (8100 mA)	12.0 Ah 11.3 Ah 10.4 Ah 8.1 Ah
	1.5 hour rate discharge Cut-off voltage 10.5 V	5.8 A
Internal resistance	Fully charged battery (20 °C)	Approx. 30 mΩ
Temperature dependency of capacity (20 hour rate)	40 °C 20 °C 0 °C -15 °C	102 % 100 % 85 % 65 %
Self discharge (20 °C)	Residual capacity after standing 3 months	91 %
	Residual capacity after standing 6 months	83 %
	Residual capacity after standing 12 months	66 %

(Note) The above characteristics data are average values obtained within three charge/discharge cycles, not the minimum values.

Discharge characteristics (20 °C) (Note)

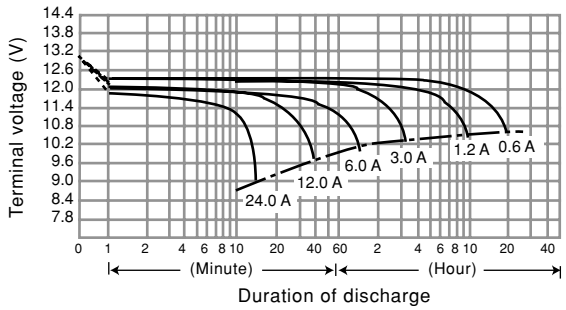

Duration of discharge vs. Discharge current (Note)

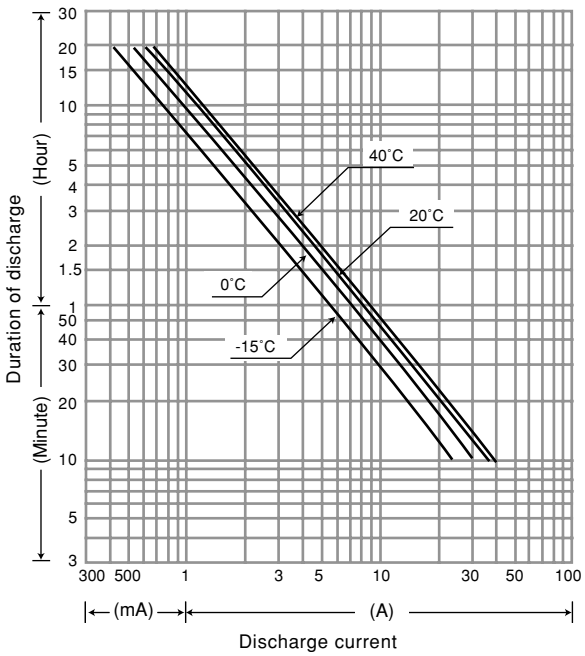

LC-PA1212P1

For standby power supplies.
Expected trickle life: 10 – 12 years at 20 °C.

Dimensions (mm)

Terminal type: Faston 250 with hole

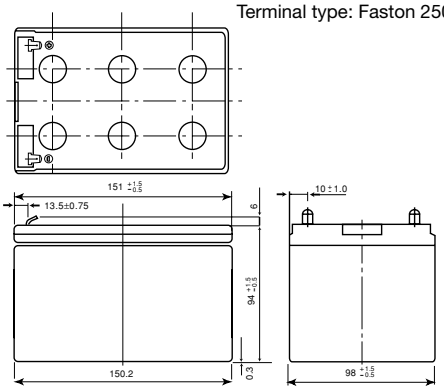

Battery case resin: Flame-retardant (UL94V-0)

Specifications

Nominal voltage		12 V
Rated capacity (20 hour rate)		12 Ah
Dimensions	Length	151 mm
	Width	98 mm
	Height	94 mm
	Total Height	100 mm
Approx. mass		3.8 kg

Characteristics

Capacity (note) (20 °C)	20 hour rate (600 mA) 10 hour rate (1130 mA) 5 hour rate (2080 mA) 1 hour rate (8100 mA)	12.0 Ah 11.3 Ah 10.4 Ah 8.1 Ah
	1.5 hour rate discharge Cut-off voltage 10.5 V	5.8 A
Internal resistance	Fully charged battery (20 °C)	Approx. 30 mΩ
Temperature dependency of capacity (20 hour rate)	40 °C 20 °C 0 °C -15 °C	102 % 100 % 85 % 65 %
Self discharge (20 °C)	Residual capacity after standing 3 months Residual capacity after standing 6 months Residual capacity after standing 12 months	91 % 83 % 66 %

(Note) The above characteristics data are average values obtained within three charge/discharge cycles, not the minimum values.

Discharge characteristics (20 °C) (Note)

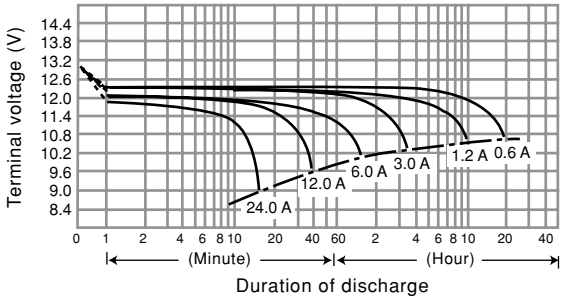

Duration of discharge vs. Discharge current (Note)

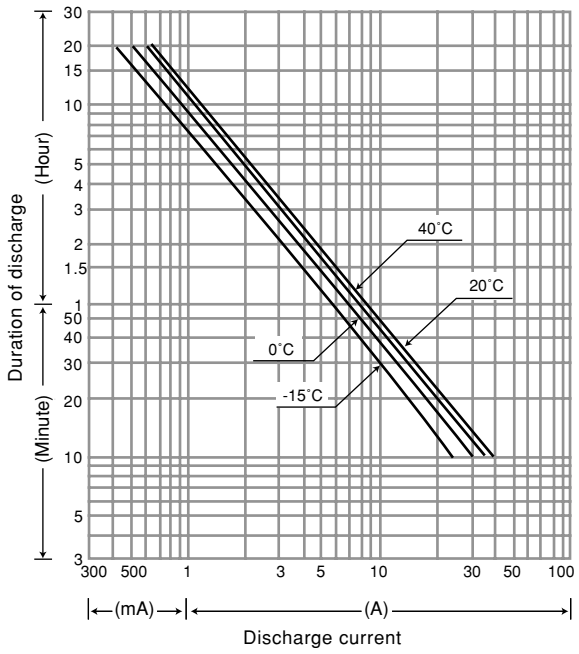

LC-CA1212P

For main power supplies.
Cycle long life type. Approx. 1200 cycles acc. IEC 896 T2).

Dimensions (mm)

Terminal type: Faston 187 or Faston 250 with hole

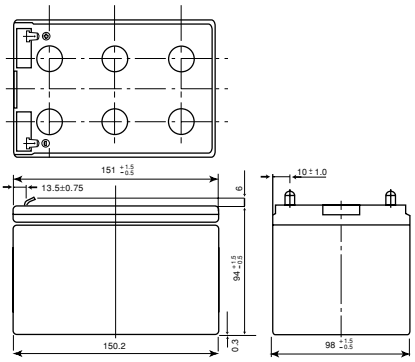

Battery case resin: Standard (UL94HB)

Specifications

Nominal voltage		12 V
Rated capacity (20 hour rate)		12 Ah
Dimensions	Length	151 mm
	Width	98 mm
	Height	94 mm
	Total Height	100 mm
Approx. mass		3.8 kg

Characteristics

Capacity (note) (20 °C)	20 hour rate (600 mA) 10 hour rate (1130 mA) 5 hour rate (2080 mA) 1 hour rate (8100 mA)	12.0 Ah 11.3 Ah 10.4 Ah 8.1 Ah
	1.5 hour rate discharge Cut-off voltage 10.5 V	5.8 A
Internal resistance	Fully charged battery (20 °C)	Approx. 30 mΩ
Temperature dependency of capacity (20 hour rate)	40 °C 20 °C 0 °C -15 °C	102 % 100 % 85 % 65 %
Self discharge (20 °C)	Residual capacity after standing 3 months Residual capacity after standing 6 months Residual capacity after standing 12 months	91 % 83 % 66 %

(Note) The above characteristics data are average values obtained within three charge/discharge cycles, not the minimum values.

Discharge characteristics (20 °C) (Note)

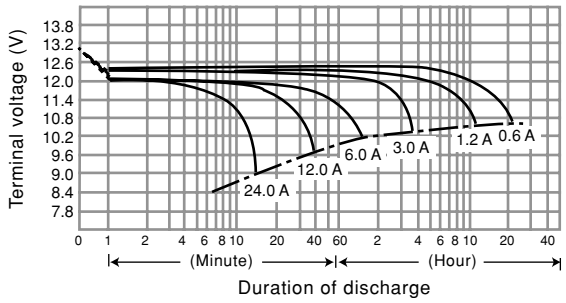

Duration of discharge vs. Discharge current (Note)

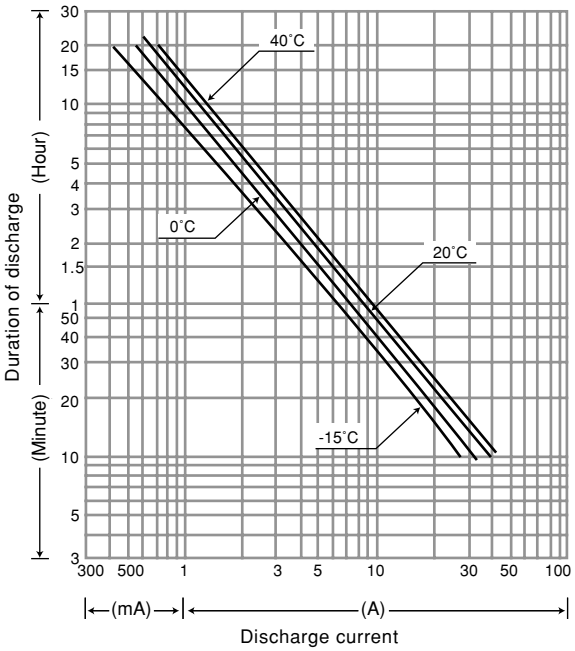

LC-RA1215P

For main and standby power supplies.
Expected trickle life: 6 – 9 years at 20 °C.

Dimensions (mm)

Terminal type: Faston 187 or Faston 250 with hole

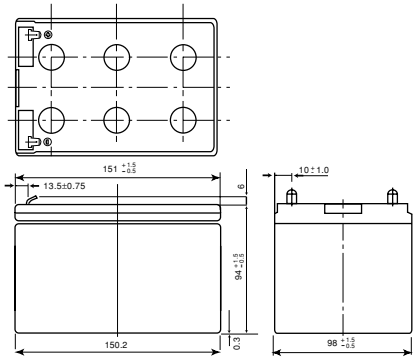

Battery case resin: Standard (UL94HB)

Specifications

Nominal voltage		12 V
Rated capacity (20 hour rate)		15 Ah
Dimensions	Length	151 mm
	Width	98 mm
	Height	94 mm
	Total Height	100 mm
Approx. mass		4.2 kg

Characteristics

Capacity (note) (20 °C)	20 hour rate (750 mA) 10 hour rate (1.40 A) 5 hour rate (2.58 A) 1 hour rate (10.00 A)	15.0 Ah 14.0 Ah 12.9 Ah 10.0 Ah
	1.5 hour rate discharge Cut-off voltage 10.5 V	7.1 A
Internal resistance	Fully charged battery (20 °C)	Approx. 30 mΩ
Temperature dependency of capacity (20 hour rate)	40 °C 20 °C 0 °C -15 °C	102 % 100 % 85 % 65 %
Self discharge (20 °C)	Residual capacity after standing 3 months Residual capacity after standing 6 months Residual capacity after standing 12 months	91 % 83 % 66 %

(Note) The above characteristics data are average values obtained within three charge/discharge cycles, not the minimum values.

Discharge characteristics (20 °C) (Note)

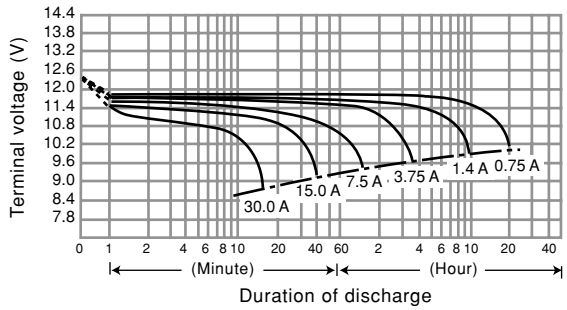

Duration of discharge vs. Discharge current (Note)

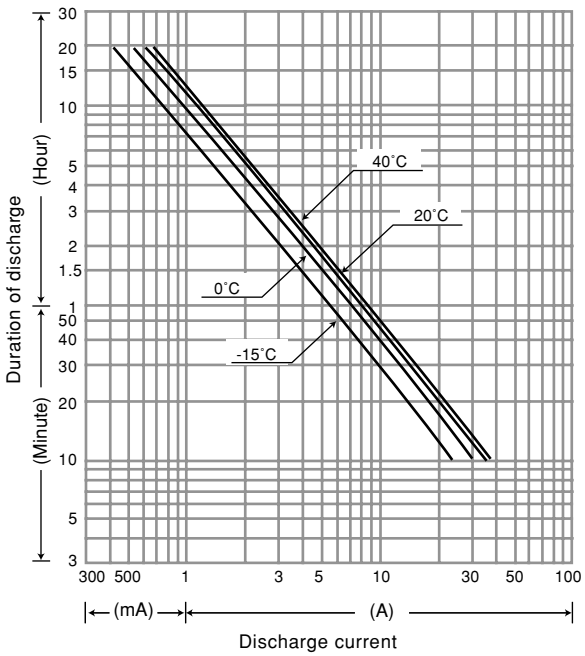

LC-XD1217P/AP

For standby power supplies.
Expected trickle life: 10 – 12 years at 20 °C.

VdS

Dimensions (mm)

Terminal type: LC-XD1217P: M5 bolt and nut
LC-XD1217AP: M5 threaded post

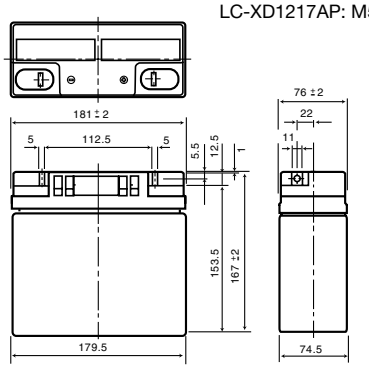

Battery case resin: Standard (UL94HB)

Specifications

Nominal voltage		12 V
Rated capacity (20 hour rate)		17 Ah
Dimensions	Length	181 mm
	Width	76 mm
	Height	167 mm
	Total Height	167 mm
Approx. mass		6.5 kg

Characteristics

Capacity (note) (20 °C)	20 hour rate (850 mA) 10 hour rate (1.5 A) 5 hour rate (2.6 A) 1 hour rate (10.0 A)	17.0 Ah 15.0 Ah 13.0 Ah 10.0 Ah
	1.5 hour rate discharge Cut-off voltage 10.5 V	7.0 A
Internal resistance	Fully charged battery (20 °C)	Approx. 12 mΩ
Temperature dependency of capacity (20 hour rate)	40 °C 20 °C 0 °C -15 °C	102 % 100 % 85 % 65 %
Self discharge (20 °C)	Residual capacity after standing 3 months Residual capacity after standing 6 months Residual capacity after standing 12 months	91 % 83 % 66 %

(Note) The above characteristics data are average values obtained within three charge/discharge cycles, not the minimum values.

Discharge characteristics (20 °C) (Note)

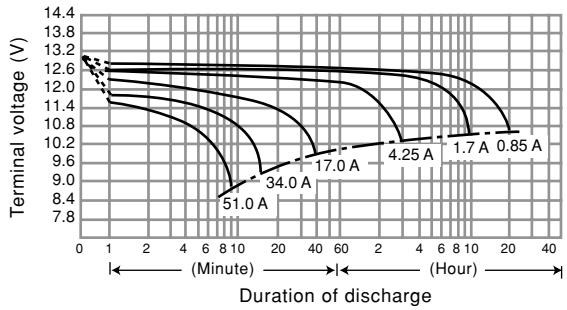

Duration of discharge vs. Discharge current (Note)

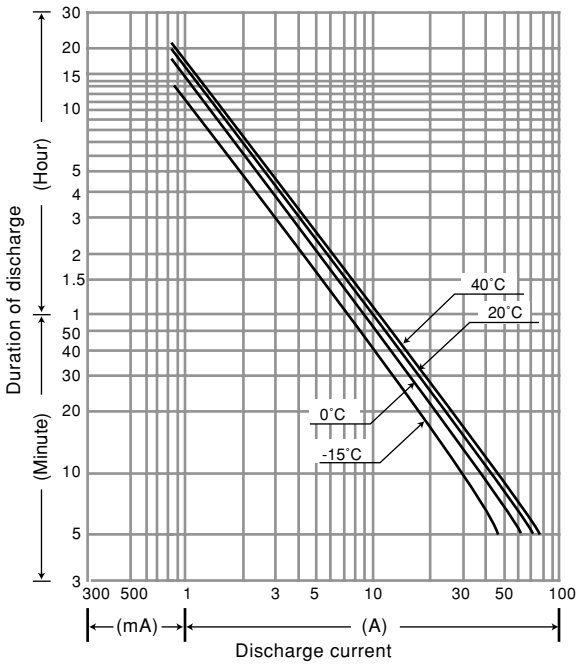

LC-X1220P/AP

For main and standby power supplies.
Trickle Design life: 10 – 12 years at 20 °C.

Dimensions (mm)

Terminal type: LC-X1220P: M5 bolt and nut
LC-X1220AP: M5 threaded post

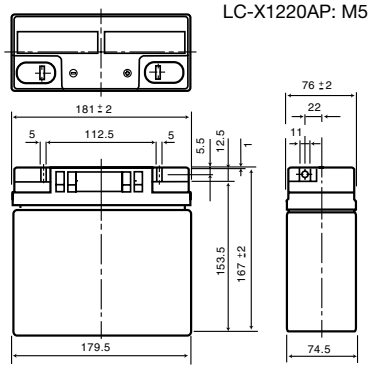

Battery case resin: Standard (UL94HB)

Specifications

Nominal voltage		12 V
Rated capacity (20 hour rate)		20 Ah
Dimensions	Length	181 mm
	Width	76 mm
	Height	167 mm
	Total Height	167 mm
Approx. mass		6.6 kg

Characteristics

Capacity (note) (20 °C)	20 hour rate (1.2 A) 10 hour rate (2.2 A) 5 hour rate (3.8 A) 1 hour rate (12.0 A)	20.0 Ah 18.0 Ah 16.0 Ah 12.0 Ah
	1.5 hour rate discharge Cut-off voltage 10.5 V	9.8 A
Internal resistance	Fully charged battery (20 °C)	Approx. 11 mΩ
Temperature dependency of capacity (20 hour rate)	40 °C 20 °C 0 °C -15 °C	102 % 100 % 85 % 65 %
Self discharge (20 °C)	Residual capacity after standing 3 months Residual capacity after standing 6 months Residual capacity after standing 12 months	91 % 83 % 66 %

(Note) The above characteristics data are average values obtained within three charge/discharge cycles, not the minimum values.
(Note) For cycle use of the battery, please contact us in advance.

Discharge characteristics (20 °C) (Note)

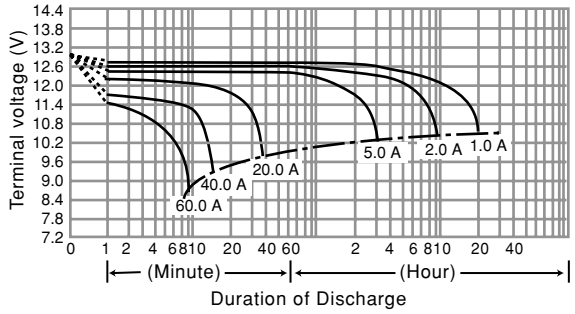

Duration of discharge vs. Discharge current (Note)

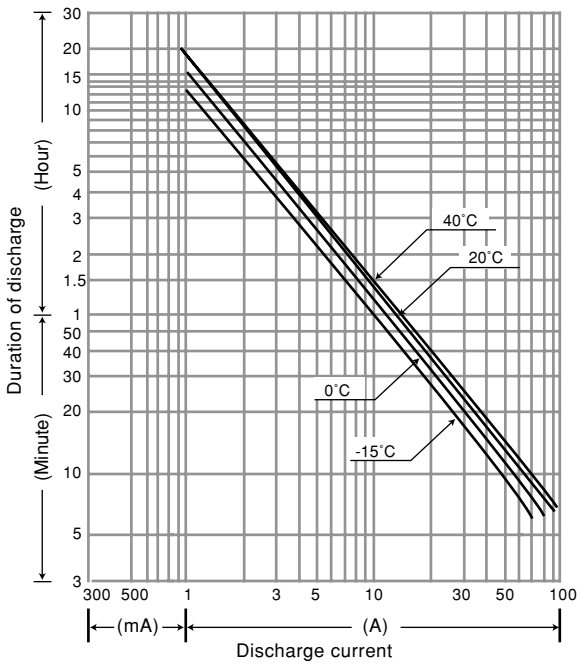

LC-X1224P/AP

For standby power supplies.
Trickle Design life: 10 – 12 years at 20 °C.

VdS

Dimensions (mm)

Terminal type: LC-X1224AP: M5 threaded post
LC-X1224P: M5 bolt and nut

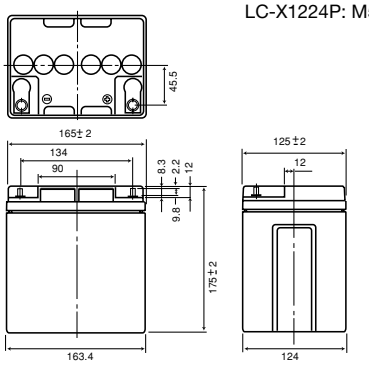

Battery case resin: Standard (UL94HB)

Specifications

Nominal voltage		12 V
Rated capacity (20 hour rate)		24 Ah
Dimensions	Length	165 mm
	Width	125 mm
	Height	175 mm
	Total Height	LC-X1224AP: 175 mm LC-X1224P: 179.5 mm
Approx. mass		9.0 kg

Characteristics

Capacity (note) (20 °C)	20 hour rate (1.2 A) 10 hour rate (2.2 A) 5 hour rate (3.8 A) 1 hour rate (14.0 A)	24.0 Ah 22.0 Ah 19.0 Ah 14.0 Ah
	1.5 hour rate discharge Cut-off voltage 10.5 V	9.8 A
Internal resistance	Fully charged battery (20 °C)	Approx. 11 mΩ
Temperature dependency of capacity (20 hour rate)	40 °C 20 °C 0 °C -15 °C	102 % 100 % 85 % 65 %
Self discharge (20 °C)	Residual capacity after standing 3 months Residual capacity after standing 6 months Residual capacity after standing 12 months	91 % 83 % 66 %

(Note) The above characteristics data are average values obtained within three charge/discharge cycles, not the minimum values.

Discharge characteristics (20 °C) (Note)

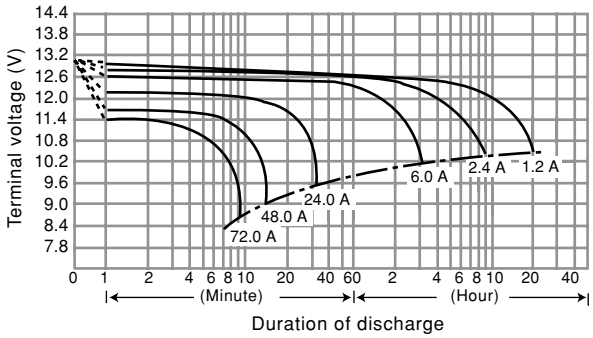

Duration of discharge vs. Discharge current (Note)

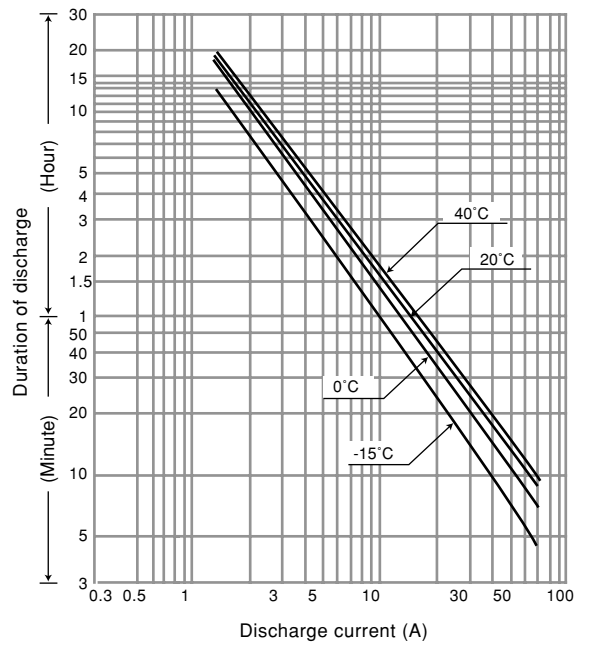

LC-X1228P/AP

For standby power supplies.
Trickle Design life: 10 – 12 years at 20 °C.

Dimensions (mm)

Terminal type: LC-X1228AP: M5 threaded post
LC-X1228P: M5 bolt and nut

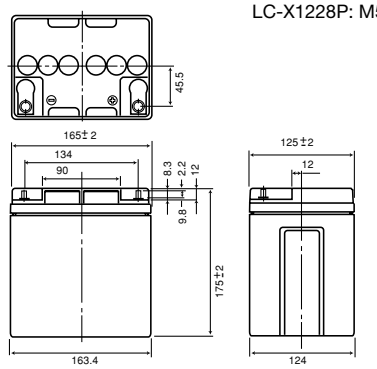

Battery case resin: Standard (UL94HB)

Specifications

Nominal voltage		12 V
Rated capacity (20 hour rate)		28 Ah
Dimensions	Length	165 mm
	Width	125 mm
	Height	175 mm
	Total Height	LC-X1228AP: 175 mm LC-X1228P: 179.5 mm
Approx. mass		11.0 kg

Characteristics

Capacity (note) (20 °C)	20 hour rate (1.40 A) 10 hour rate (2.65 A) 5 hour rate (5.00 A) 1 hour rate (21.00 A)	28.0 Ah 26.5 Ah 25.0 Ah 21.0 Ah
	1.5 hour rate discharge Cut-off voltage 10.5 V	14.0 A
Internal resistance	Fully charged battery (20 °C)	Approx. 8 mΩ
Temperature dependency of capacity (20 hour rate)	40 °C 20 °C 0 °C -15 °C	102 % 100 % 85 % 65 %
Self discharge (20 °C)	Residual capacity after standing 3 months Residual capacity after standing 6 months Residual capacity after standing 12 months	91 % 83 % 66 %

(Note) The above characteristics data are average values obtained within three charge/discharge cycles, not the minimum values.

Discharge characteristics (20 °C) (Note)

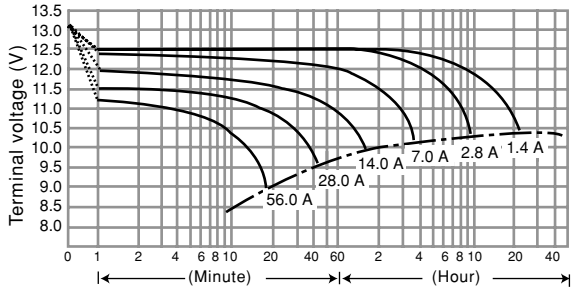

Duration of discharge vs. Discharge current (Note)

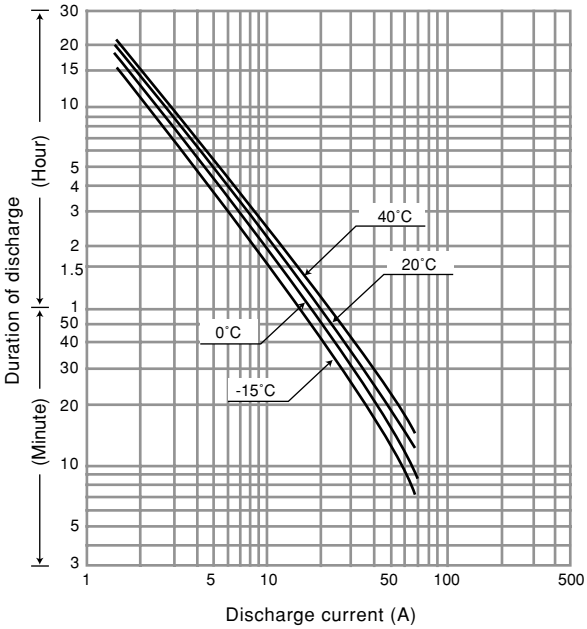

LC-XC1228P

For main power supplies.
Cycle long life type. Approx. 1200 cycles (acc. IEC 896 T2).

Dimensions (mm)

Terminal type: M5 bolt and nut

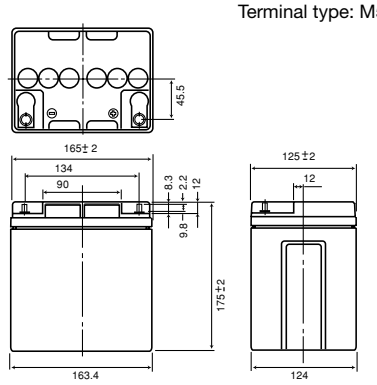

Battery case resin: Standard (UL94HB)

Specifications

Nominal voltage		12 V
Rated capacity (20 hour rate)		28 Ah
Dimensions	Length	165 mm
	Width	125 mm
	Height	175 mm
	Total Height	179.5 mm
Approx. mass		11.0 kg

Characteristics

Capacity (note) (20 °C)	20 hour rate (1.40 A) 10 hour rate (2.65 A) 5 hour rate (5.00 A) 1 hour rate (21.00 A)	28.0 Ah 26.5 Ah 25.0 Ah 21.0 Ah
	1.5 hour rate discharge Cut-off voltage 10.5 V	14.0 A
Internal resistance	Fully charged battery (20 °C)	Approx. 10 mΩ
Temperature dependency of capacity (20 hour rate)	40 °C 20 °C 0 °C -15 °C	102 % 100 % 85 % 65 %
Self discharge (20 °C)	Residual capacity after standing 3 months Residual capacity after standing 6 months Residual capacity after standing 12 months	91 % 83 % 66 %

(Note) The above characteristics data are average values obtained within three charge/discharge cycles, not the minimum values.

Discharge characteristics (20 °C) (Note)

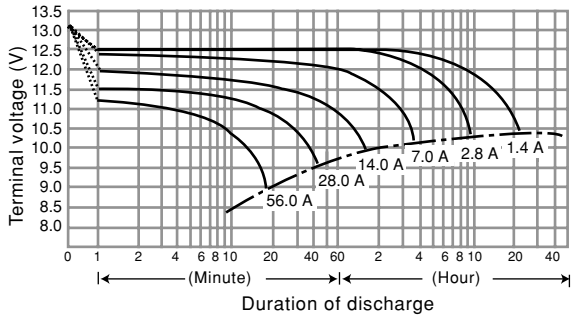

Duration of discharge vs. Discharge current (Note)

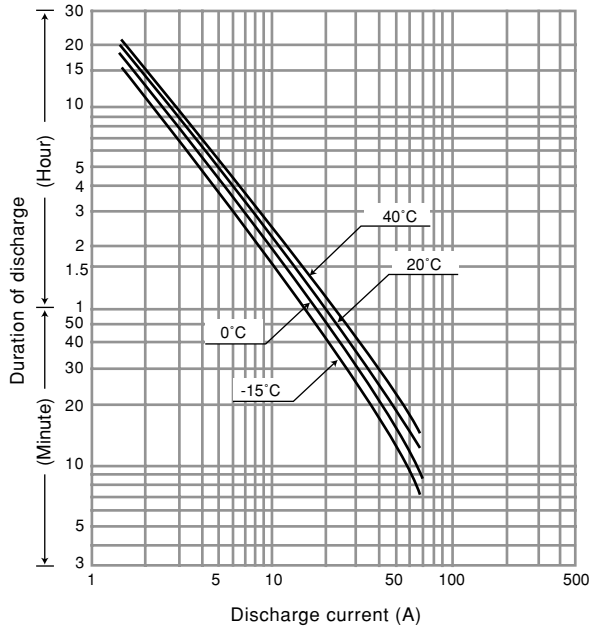

LC-R1233P

For main and standby power supplies.
Expected trickle life: 6 – 9 years at 20 °C.

Dimensions (mm)

Terminal type: M6 bolt and nut

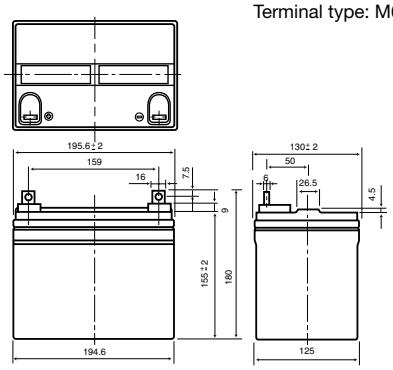

Battery case resin: Standard (UL94HB)
Flame-retardant (UL94V-0)

Specifications

Nominal voltage		12 V
Rated capacity (20 hour rate)		33 Ah
Dimensions	Length	195.6 mm
	Width	130 mm
	Height	155 mm
	Total Height	180 mm
Approx. mass		12.0 kg

Characteristics

Capacity (note) (20 °C)	20 hour rate (1.65 A) 10 hour rate (3.00 A) 5 hour rate (5.40 A) 1 hour rate (20.00 A)	33.0 Ah 30.0 Ah 27.0 Ah 20.0 Ah
	1.5 hour rate discharge Cut-off voltage 10.5 V	13.4 A
Internal resistance	Fully charged battery (20 °C)	Approx. 7 mΩ
Temperature dependency of capacity (20 hour rate)	40 °C 20 °C 0 °C -15 °C	102 % 100 % 85 % 65 %
Self discharge (20 °C)	Residual capacity after standing 3 months Residual capacity after standing 6 months Residual capacity after standing 12 months	91 % 83 % 66 %

(Note) The above characteristics data are average values obtained within three charge/discharge cycles, not the minimum values.
(Note) For cycle use of the battery, please consult us in advance.

Discharge characteristics (20 °C) (Note)

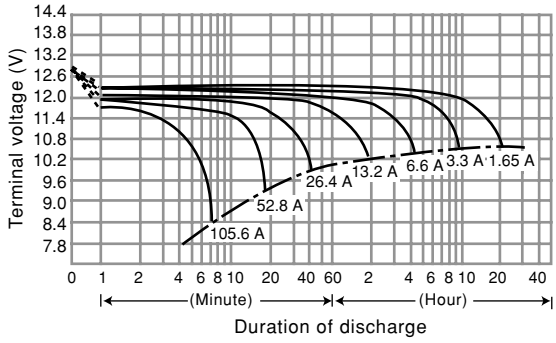

Duration of discharge vs. Discharge current (Note)

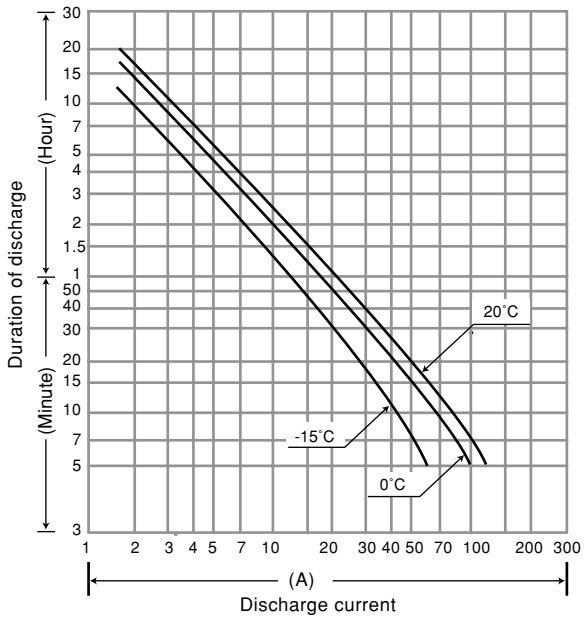

LC-X1238P/AP

For standby power supplies.
Trickle Design life: 10 – 12 years at 20 °C.

VdS

Dimensions (mm)

Terminal type: LC-X1238AP: M5 threaded post
LC-X1238P: M6 bolt and nut

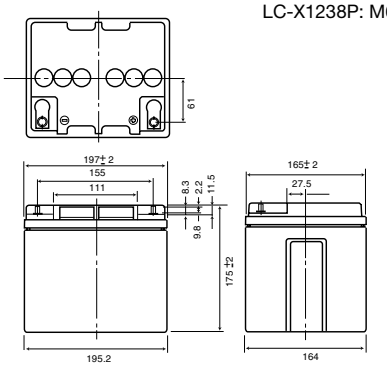

Battery case resin: Standard (UL94HB)

Specifications

Nominal voltage		12 V
Rated capacity (20 hour rate)		38 Ah
Dimensions	Length	197 mm
	Width	165 mm
	Height	175 mm
	Total Height	LC-X1238AP: 175 mm LC-X1238P: 180 mm
Approx. mass		13.0 kg

Characteristics

Capacity (note) (20 °C)	20 hour rate (1.9 A) 10 hour rate (3.5 A) 5 hour rate (6.3 A) 1 hour rate (22.5 A)	38.0 Ah 35.0 Ah 31.5 Ah 22.5 Ah
	1.5 hour rate discharge Cut-off voltage 10.5 V	15.5 A
Internal resistance	Fully charged battery (20 °C)	Approx. 8 mΩ
Temperature dependency of capacity (20 hour rate)	40 °C 20 °C 0 °C -15 °C	102 % 100 % 85 % 65 %
Self discharge (20 °C)	Residual capacity after standing 3 months Residual capacity after standing 6 months Residual capacity after standing 12 months	91 % 83 % 66 %

(Note) The above characteristics data are average values obtained within three charge/discharge cycles, not the minimum values.

Discharge characteristics (20 °C) (Note)

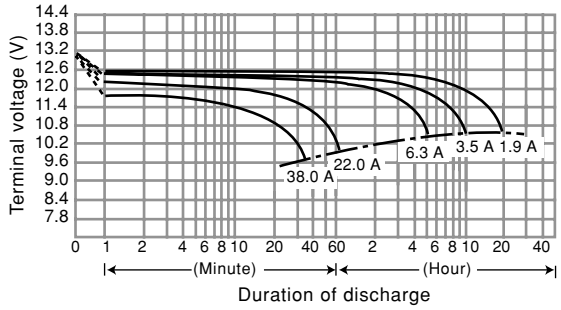

Duration of discharge vs. Discharge current (Note)

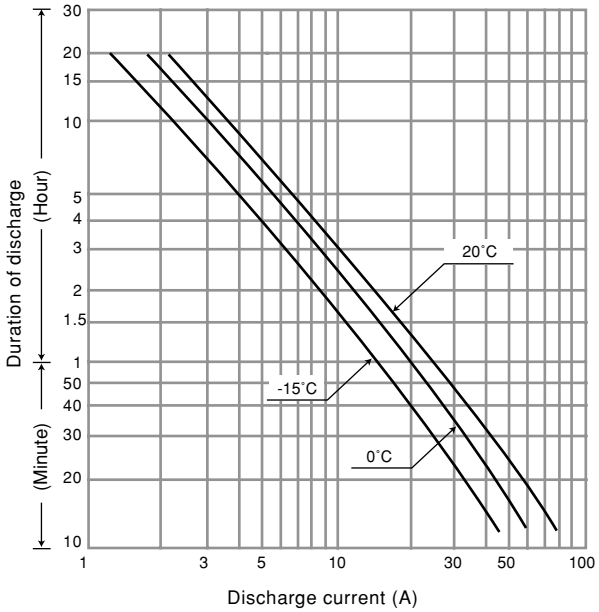

LC-XC1238P

For main power supplies.
Cycle long life type. Approx. 1200 cycles (acc. IEC 896 T2).

Dimensions (mm)

Terminal type: M6 bolt and nut

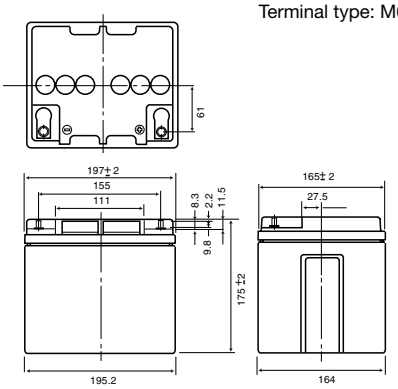

Battery case resin: Standard (UL94HB)

Specifications

Nominal voltage		12 V
Rated capacity (20 hour rate)		38 Ah
Dimensions	Length	197 mm
	Width	165 mm
	Height	175 mm
	Total Height	179.5 mm
Approx. mass		15.0 kg

Characteristics

Capacity (note) (20 °C)	20 hour rate (1.9 A) 10 hour rate (3.5 A) 5 hour rate (6.3 A) 1 hour rate (22.5 A)	38.0 Ah 35.0 Ah 31.5 Ah 22.5 Ah
	1.5 hour rate discharge Cut-off voltage 10.5 V	15.5 A
Internal resistance	Fully charged battery (20 °C)	Approx. 9 mΩ
Temperature dependency of capacity (20 hour rate)	40 °C 20 °C 0 °C -15 °C	102 % 100 % 85 % 65 %
Self discharge (20 °C)	Residual capacity after standing 3 months Residual capacity after standing 6 months Residual capacity after standing 12 months	91 % 83 % 66 %

(Note) The above characteristics data are average values obtained within three charge/discharge cycles, not the minimum values.

Discharge characteristics (20 °C) (Note)

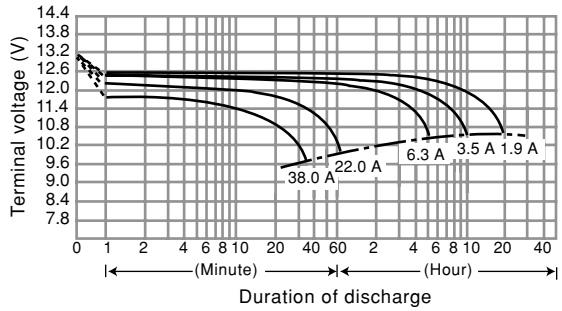

Duration of discharge vs. Discharge current (Note)

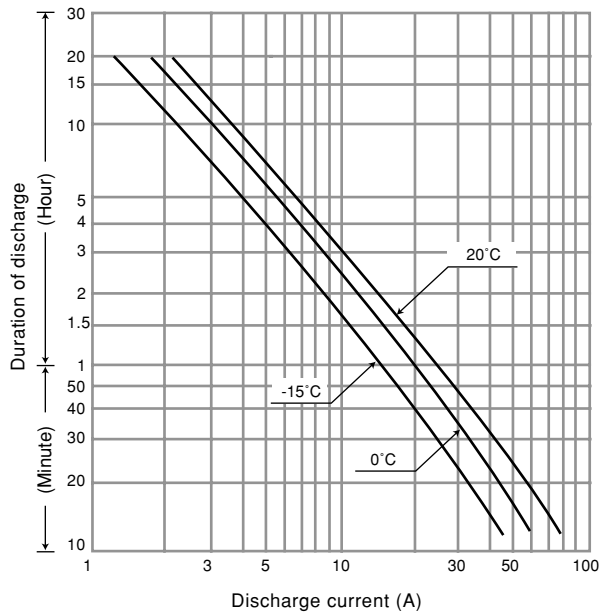

LC-X1242P/AP

For standby power supplies.
Trickle Design life: 10 – 12 years at 20 °C.

Dimensions (mm)

Terminal type: LC-X1242AP: M5 threaded post
LC-X1242P: M6 bolt and nut

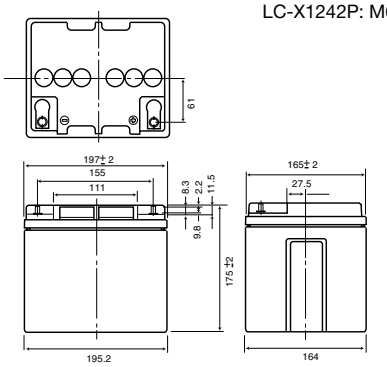

Battery case resin: Standard (UL94HB)

Specifications

Nominal voltage		12 V
Rated capacity (20 hour rate)		42 Ah
Dimensions	Length	197 mm
	Width	165 mm
	Height	175 mm
	Total Height	LC-X1242AP: 175 mm LC-X1242P: 180 mm
Approx. mass		16.0 kg

Characteristics

Capacity (note) (20 °C)	20 hour rate (2.1 A) 10 hour rate (4.0 A) 5 hour rate (7.4 A) 1 hour rate (26.0 A)	42.0 Ah 40.0 Ah 37.0 Ah 26.0 Ah
	1.5 hour rate discharge Cut-off voltage 10.5 V	20.0 A
Internal resistance	Fully charged battery (20 °C)	Approx. 8 mΩ
Temperature dependency of capacity (20 hour rate)	40 °C 20 °C 0 °C -15 °C	102 % 100 % 85 % 65 %
Self discharge (20 °C)	Residual capacity after standing 3 months Residual capacity after standing 6 months Residual capacity after standing 12 months	91 % 83 % 66 %

(Note) The above characteristics data are average values obtained within three charge/discharge cycles, not the minimum values.

Discharge characteristics (20 °C) (Note)

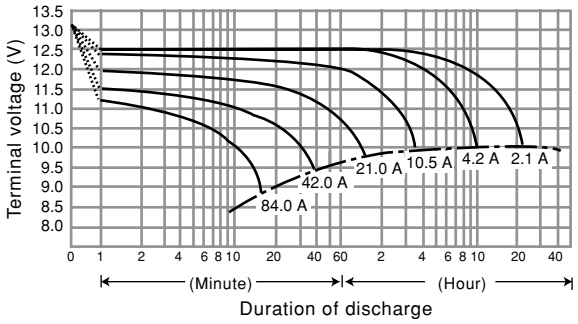

Duration of discharge vs. Discharge current (Note)

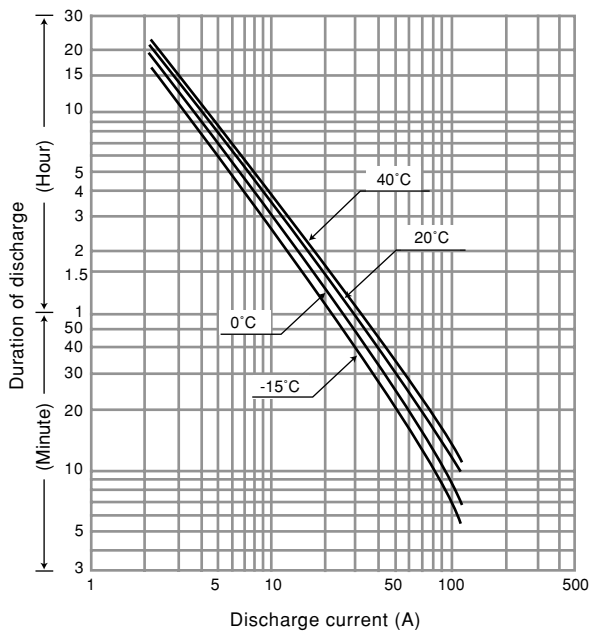

LC-X1265P

For standby power supplies.
Trickle Design life: 10 – 12 years at 20 °C.

VdS

Dimensions (mm)

Terminal type: M6 bolt and nut

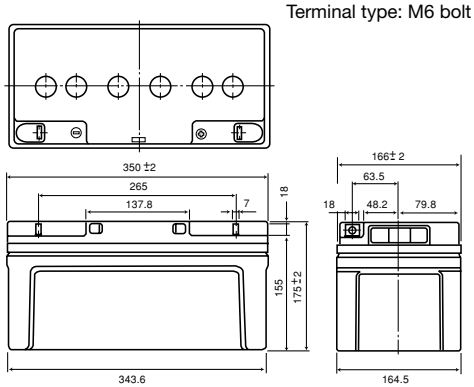

Battery case resin: Standard (UL94HB)

Specifications

Nominal voltage		12 V
Rated capacity (20 hour rate)		65 Ah
Dimensions	Length	350 mm
	Width	166 mm
	Height	175 mm
	Total Height	175 mm
Approx. mass		20.0 kg

Characteristics

Capacity (note) (20 °C)	20 hour rate (3.25 A) 10 hour rate (5.90 A) 5 hour rate (10.60 A) 1 hour rate (40.00 A)	65.0 Ah 59.0 Ah 53.0 Ah 40.0 Ah
	1.5 hour rate discharge Cut-off voltage 10.5 V	26.0 A
Internal resistance	Fully charged battery (20 °C)	Approx. 7 mΩ
Temperature dependency of capacity (20 hour rate)	40 °C 20 °C 0 °C -15 °C	102 % 100 % 85 % 65 %
Self discharge (20 °C)	Residual capacity after standing 3 months Residual capacity after standing 6 months Residual capacity after standing 12 months	91 % 83 % 66 %

(Note) The above characteristics data are average values obtained within three charge/discharge cycles, not the minimum values.

Discharge characteristics (20 °C) (Note)

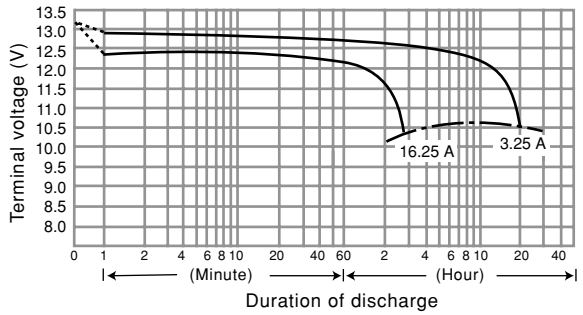

Duration of discharge vs. Discharge current (Note)

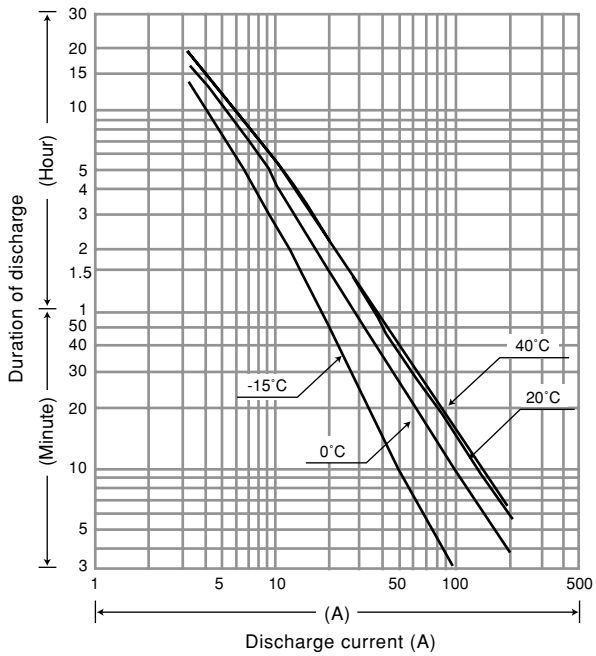

LC-PA1275P

For standby power supplies.
Expected trickle life: 10 – 12 years at 20 °C.

Dimensions (mm)

Terminal type: M6 bolt and nut

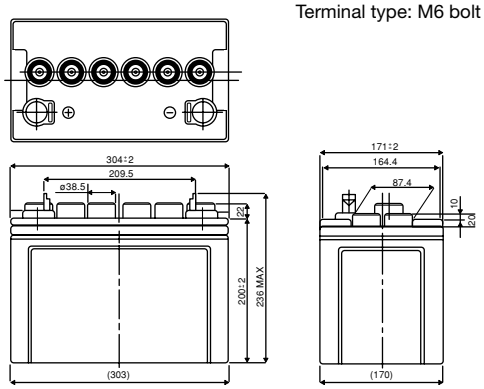

Battery case resin: Flame-retardant (UL94V-0)

Specifications

Nominal voltage		12 V
Rated capacity (20 hour rate)		75 Ah
Dimensions	Length	304 mm
	Width	171 mm
	Height	200 mm
	Total Height	236 mm
Approx. mass		26.6 kg

Characteristics

Capacity (note) (20 °C)	20 hour rate (3.8 A) 10 hour rate (6.7 A) 5 hour rate (11.2 A) 1 hour rate (42.0 A)	75.0 Ah 67.0 Ah 56.0 Ah 42.0 Ah
	1.5 hour rate discharge Cut-off voltage 10.5 V	30.0 A
Internal resistance	Fully charged battery (20 °C)	Approx. 5.0 mΩ
Temperature dependency of capacity (20 hour rate)	40 °C 20 °C 0 °C -15 °C	102 % 100 % 85 % 65 %
Self discharge (20 °C)	Residual capacity after standing 3 months Residual capacity after standing 6 months Residual capacity after standing 12 months	91 % 83 % 66 %

(Note) The above characteristics data are average values obtained within three charge/discharge cycles, not the minimum values.

Discharge characteristics (20 °C) (Note)

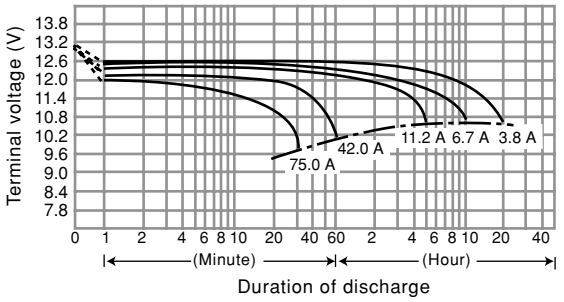

Duration of discharge vs. Discharge current (Note)

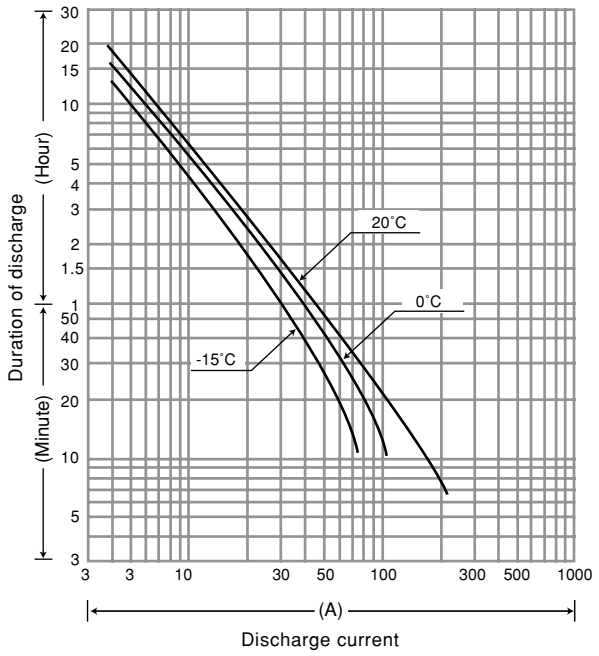

LC-XB12100P

For standby power supplies.
Expected trickle life: 10 – 12 years at 20 °C.

Dimensions (mm)

Terminal type: M8 bolt and nut

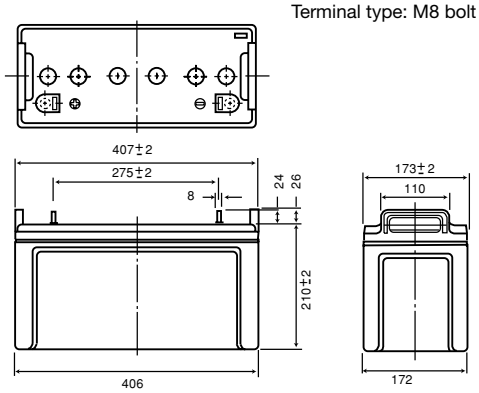

Battery case resin: Flame-retardant (UL94V-0)

Specifications

Nominal voltage		12 V
Rated capacity (20 hour rate)		100 Ah
Dimensions	Length	407 mm
	Width	173 mm
	Height	210 mm
	Total Height	236 mm
Approx. mass		37.0 kg

Characteristics

Capacity (note) (20 °C)	20 hour rate (5.0 A) 10 hour rate (9.8 A) 5 hour rate (18.0 A) 1 hour rate (75.0 A)	100.0 Ah 98.0 Ah 90.0 Ah 75.0 Ah
	1.5 hour rate discharge Cut-off voltage 10.5 V	50.0 A
Internal resistance	Fully charged battery (20 °C)	Approx. 4.5 mΩ
Temperature dependency of capacity (20 hour rate)	40 °C 20 °C 0 °C -15 °C	102 % 100 % 85 % 65 %
Self discharge (20 °C)	Residual capacity after standing 3 months Residual capacity after standing 6 months Residual capacity after standing 12 months	91 % 83 % 66 %

(Note) The above characteristics data are average values obtained within three charge/discharge cycles, not the minimum values.

Discharge characteristics (20 °C) (Note)

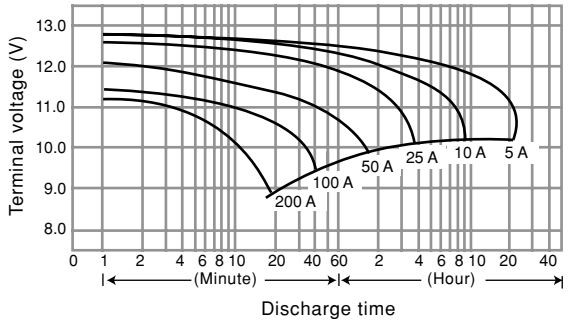

Duration of discharge vs. Discharge current (Note)

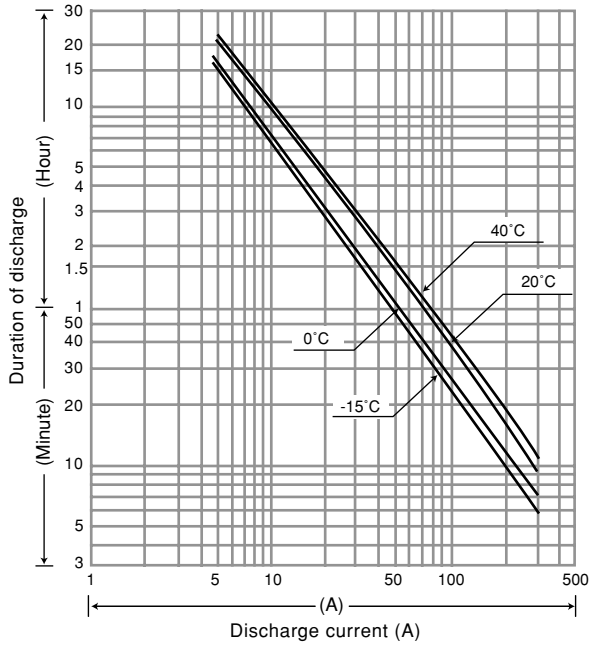

LC-PD12100P

For standby power supplies.
Expected trickle life: 10 – 12 years at 20 °C.

Dimensions (mm)

Terminal type: M8 bolt and nut

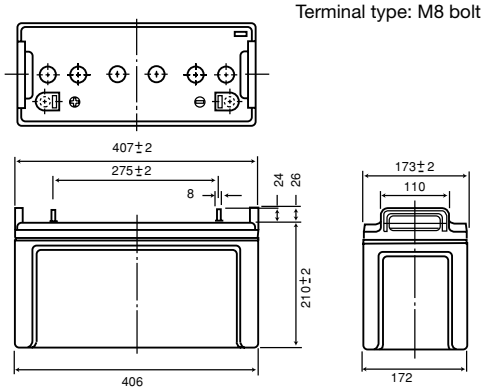

Battery case resin: Flame-retardant (UL94V-0)

Specifications

Nominal voltage		12 V
Rated capacity (20 hour rate)		100 Ah
Dimensions	Length	407 mm
	Width	173 mm
	Height	210 mm
	Total Height	236 mm
Approx. mass		36.6 kg

Characteristics

Capacity (note) (20 °C)	20 hour rate (5.0 A) 10 hour rate (9.0 A) 5 hour rate (15.0 A) 1 hour rate (56.0 A)	100.0 Ah 90.0 Ah 75.0 Ah 56.0 Ah
	1.5 hour rate discharge Cut-off voltage 10.5 V	40.0 A
Internal resistance	Fully charged battery (20 °C)	Approx. 4.5 mΩ
Temperature dependency of capacity (20 hour rate)	40 °C 20 °C 0 °C -15 °C	102 % 100 % 85 % 65 %
Self discharge (20 °C)	Residual capacity after standing 3 months Residual capacity after standing 6 months Residual capacity after standing 12 months	91 % 83 % 66 %

(Note) The above characteristics data are average values obtained within three charge/discharge cycles, not the minimum values.

Discharge characteristics (20 °C) (Note)

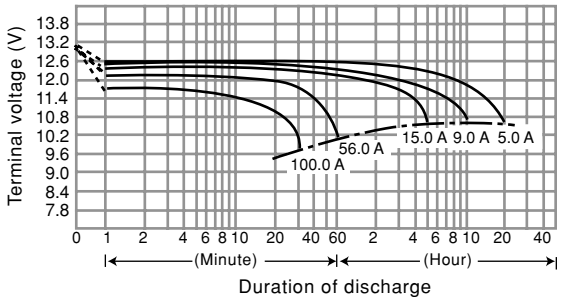

Duration of discharge vs. Discharge current (Note)

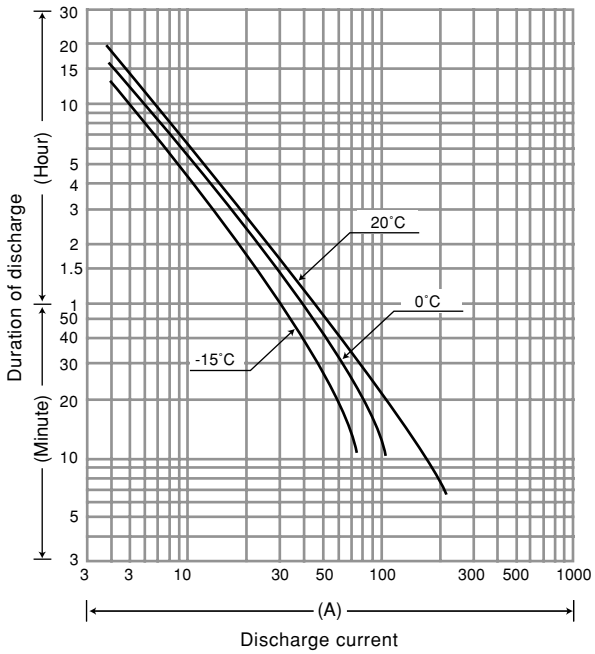

UP-RW0645P1

For standby power supplies.
Expected trickle life: 6 – 9 years at 20 °C.

Dimensions (mm)

Terminal Type: Faston 250 with hole

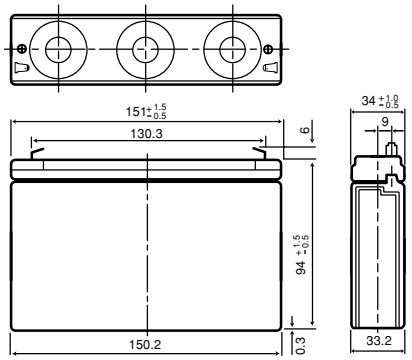

Battery case resin: Standard (UL94HB)

Specifications

Nominal voltage		6 V
Nominal capacity (10 minute rate)		45 W/2 V
Dimensions	Length	151 mm
	Width	34 mm
	Height	94 mm
	Total Height	100 mm
Approx. mass		1.3 kg

Characteristics

Capacity (note) (20 °C) (9.6 V cutoff)	30 minute rate 15 minute rate 10 minute rate 5 minute rate	56 W 97 W 134 W 205 W
Internal resistance	Fully charged battery (20 °C)	Approx. 11 mΩ
Temperature dependency of capacity (10 hour rate)	40 °C 20 °C 0 °C -15 °C	102 % 100 % 85 % 65 %
Self discharge (20 °C)	Residual capacity after standing 3 months Residual capacity after standing 6 months Residual capacity after standing 12 months	91 % 83 % 66 %

Watt table

Cutoff	Discharge Runtime at 20 °C						
	3 min.	5 min.	7 min.	10 min.	15 min.	20 min.	30 min.
9.6 V	265	205	165	134	97	79	56
10.2 V	245	195	157	129	96	78	55
10.8 V	217	165	137	117	90	73	54

(Note) The above characteristics data are average values obtained within three charge/discharge cycles, not the minimum values. This battery is designed for high-rate-discharge and we do not specify 20 hour rate discharge capacity. For cycle use of the battery, please contact Panasonic in advance.

Discharge characteristics (20 °C) (Note)

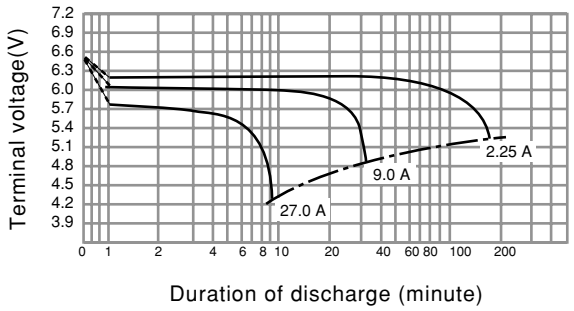

Duration of discharge vs. Discharge current (Note)

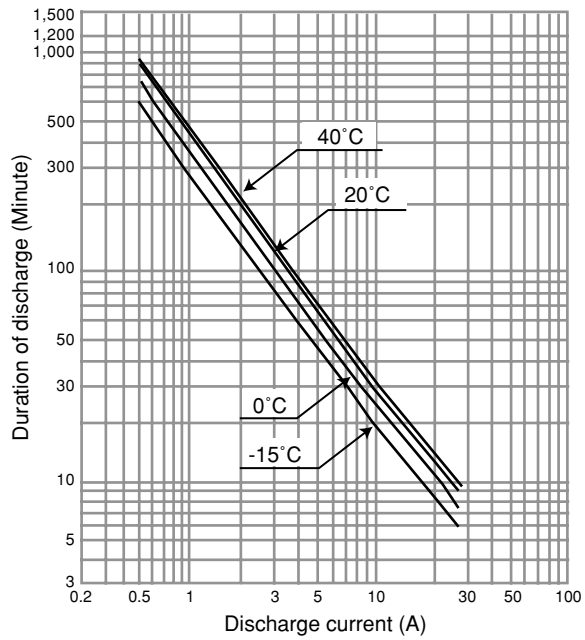

UP-RW1220P1

For standby power supplies.
Trickle Design life: 6 – 9 years at 20 °C.

Dimensions (mm)

Terminal Type: Faston 250 with hole

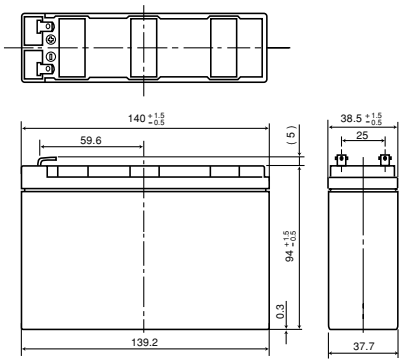

Battery case resin: Standard (UL94HB)

Specifications

Nominal voltage		12 V
Nominal capacity (10 minute rate)		20 W/2 V
Dimensions	Length	140.0 mm
	Width	38.5 mm
	Height	94.0 mm
	Total Height	max. 100 mm
Approx. mass		1.35 kg

Characteristics

Capacity (note) (20 °C) (9.6 V cutoff)	30 minute rate 15 minute rate 10 minute rate 5 minute rate	155 W 86 W 114 W 171 W
Internal resistance	Fully charged battery (20 °C)	Approx. 44 mΩ
Temperature dependency of capacity (10 hour rate)	40 °C 20 °C 0 °C -15 °C	102 % 100 % 85 % 65 %
Self discharge (20 °C)	Residual capacity after standing 3 months Residual capacity after standing 6 months Residual capacity after standing 12 months	91 % 83 % 66 %

Watt table

Cutoff	Discharge Runtime at 20 °C (unit: watt)						
	3 min.	5 min.	7 min.	10 min.	15 min.	20 min.	30 min.
9.6 V	225	171	142	114	86	72	55
10.2 V	206	158	128	107	82	70	50
10.8 V	168	130	109	96	77	64	45

(Note) The above characteristics data are average values obtained within three charge/discharge cycles, not the minimum values.

(Note) This battery is designed for high-rate discharge, therefore we do not specify 20-hour-rate discharge capacity.

(Note) When specific conditions are satisfied, this battery can be used for main power supplies. Please consult Panasonic.

Discharge characteristics (20 °C) (Note)

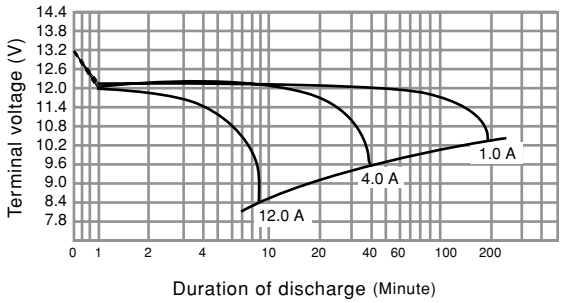

Duration of discharge vs. Discharge current (Note)

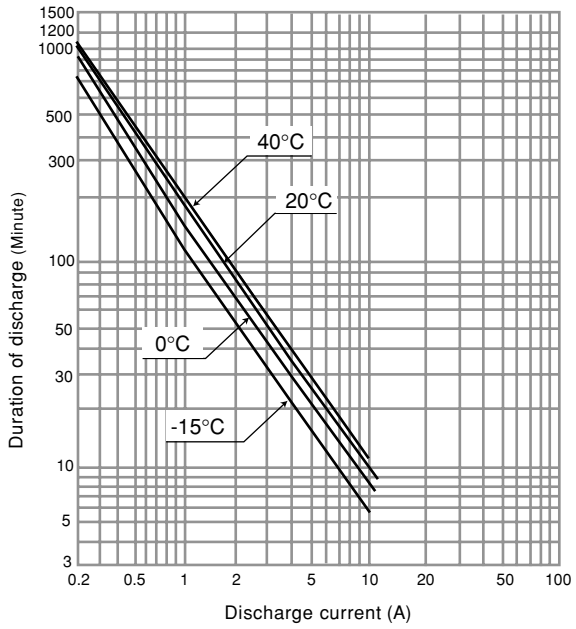

UP-RWA1232P1 / P2

For standby power supplies.
Trickle Design life: 6 – 9 years at 20 °C.

Dimensions (mm)

Terminal Type: Faston 250 with hole
or Faston 187/Faston 250 mixed.

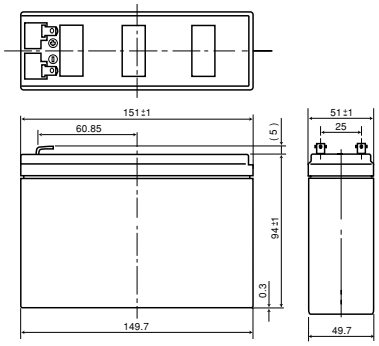

Battery case resin: Standard (UL94HB)

Specifications

Nominal voltage		12 V
Nominal capacity (10 minute rate)		32 W/2 V
Dimensions	Length	151 mm
	Width	51 mm
	Height	94 mm
	Total Height	max. 100 mm
Approx. mass		2.0 kg

Characteristics

Capacity (note) (20 °C) (9.6 V cutoff)	30 minute rate 15 minute rate 10 minute rate 5 minute rate	94 W 149 W 182 W 294 W
Internal resistance	Fully charged battery (20 °C)	Approx. 33 mΩ
Temperature dependency of capacity (10 hour rate)	40 °C 20 °C 0 °C -15 °C	102 % 100 % 85 % 65 %
Self discharge (20 °C)	Residual capacity after standing 3 months Residual capacity after standing 6 months Residual capacity after standing 12 months	91 % 83 % 66 %

Watt table

Cutoff	Discharge Runtime at 20 °C (unit:watt)						
	3 min.	5 min.	7 min.	10 min.	15 min.	20 min.	30 min.
9.6 V	389	294	242	182	149	124	94
10.2 V	342	266	211	172	134	116	90
10.8 V	279	218	180	155	123	106	83

(Note) The above characteristics data are average values obtained within three charge/discharge cycles, not the minimum values.

(Note) This battery is designed for high-rate discharge, therefore we do not specify 20-hour-rate discharge capacity.

(Note) When specific conditions are satisfied, this battery can be used for main power supplies. Please consult Panasonic.

Discharge characteristics (20 °C) (Note)

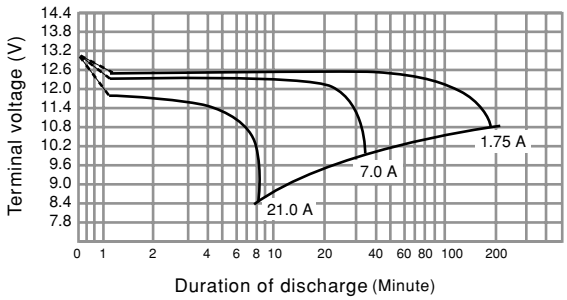

Duration of discharge vs. Discharge current (Note)

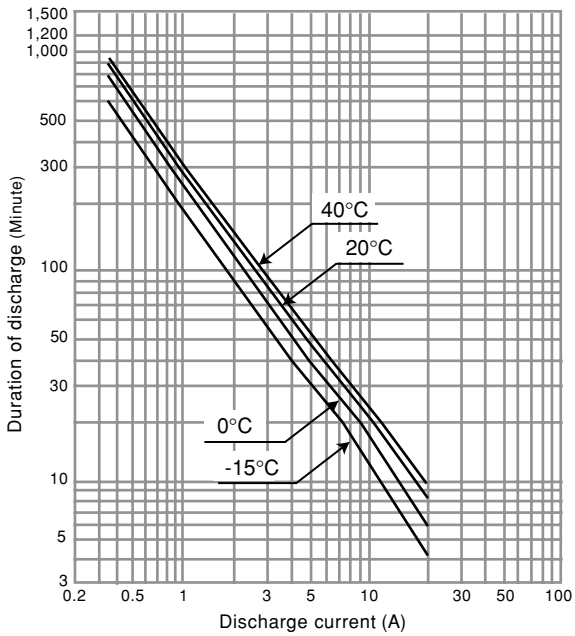

UP-RW1245P1

For standby power supplies.
Trickle Design life: 6 – 9 years at 20 °C.

Dimensions (mm)

Terminal Type: Faston 250 with hole

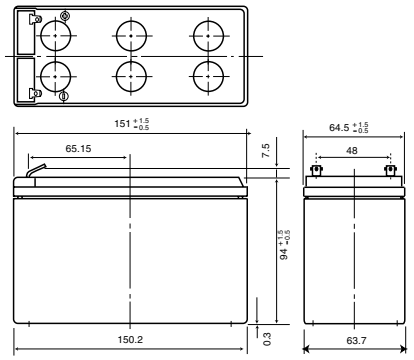

Battery case resin: Standard (UL94HB)

Specifications

Nominal voltage		12 V
Nominal capacity (10 minute rate)		45 W/2 V
Dimensions	Length	151.0 mm
	Width	64.5 mm
	Height	94.0 mm
	Total Height	101.5 mm
Approx. mass		2.6 kg

Characteristics

Capacity (note) (20 °C) (9.6 V cutoff)	30 minute rate 15 minute rate 10 minute rate 5 minute rate	108 W 185 W 254 W 389 W
Internal resistance	Fully charged battery (20 °C)	Approx. 21 mΩ
Temperature dependency of capacity (10 hour rate)	40 °C 20 °C 0 °C -15 °C	102 % 100 % 85 % 65 %
Self discharge (20 °C)	Residual capacity after standing 3 months Residual capacity after standing 6 months Residual capacity after standing 12 months	91 % 83 % 66 %

Watt table

Cutoff	Discharge Runtime at 20 °C (unit: watt)						
	3 min.	5 min.	7 min.	10 min.	15 min.	20 min.	30 min.
9.6 V	503	389	313	254	185	154	108
10.2 V	465	370	299	245	183	151	107
10.8 V	412	313	260	222	171	141	105

(Note) The above characteristics data are average values obtained within three charge/discharge cycles, not the minimum values.

(Note) This battery is designed for high-rate discharge, therefore we do not specify 20-hour-rate discharge capacity.

(Note) When specific conditions are satisfied, this battery can be used for main power supplies. Please consult Panasonic.

Discharge characteristics (20 °C) (Note)

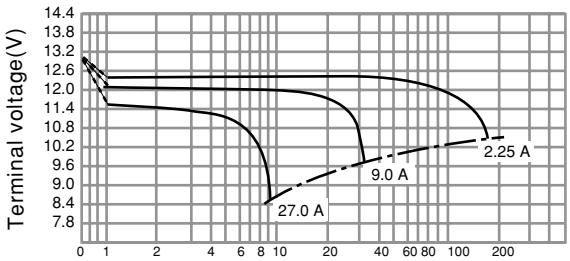

Duration of discharge vs. Discharge current (Note)

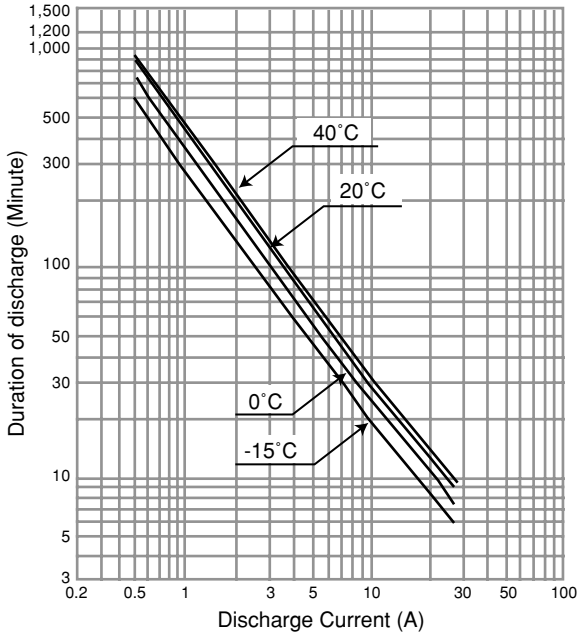

UP-PW1245P1

For standby power supplies.
Expected trickle life: 10 – 12 years at 20 °C.

Dimensions (mm)

Terminal Type: Faston 250 with hole

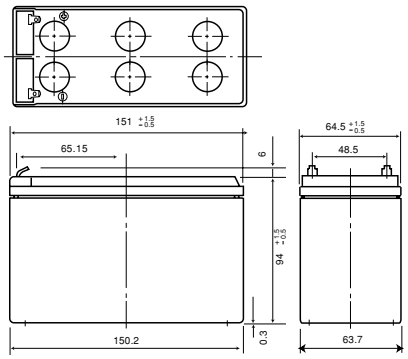

Battery case resin: Flame-retardant (UL94V-0)

Specifications

Nominal voltage		12 V
Nominal capacity (10 minute rate)		45 W/2 V
Dimensions	Length	151.0 mm
	Width	64.5 mm
	Height	94.0 mm
	Total Height	100 mm
Approx. mass		2.6 kg

Characteristics

Capacity (note) (20 °C) (9.6 V cutoff)	30 minute rate 15 minute rate 10 minute rate 5 minute rate	112 W 195 W 268 W 410 W
Internal resistance	Fully charged battery (20 °C)	Approx. 21 mΩ
Temperature dependency of capacity (10 hour rate)	40 °C 20 °C 0 °C -15 °C	102 % 100 % 85 % 65 %
Residual capacity after self discharge (20 °C)	Residual capacity after standing 3 months Residual capacity after standing 6 months Residual capacity after standing 12 months	91 % 83 % 66 %

Watt table

Cutoff	Discharge Runtime at 20 °C (unit: watt)						
	3 min.	5 min.	7 min.	10 min.	15 min.	20 min.	30 min.
9.6 V	503	389	313	254	185	154	108
10.2 V	465	370	299	245	183	151	107
10.8 V	412	313	260	222	171	141	105

(Note) The above characteristics data are average values obtained within three charge/discharge cycles, not the minimum values.

(Note) This battery is designed for high-rate discharge, therefore we do not specify 20-hour-rate discharge capacity.

(Note) When specific conditions are satisfied, this battery can be used for main power supplies. Please consult Panasonic.

Discharge characteristics (20 °C) (Note)

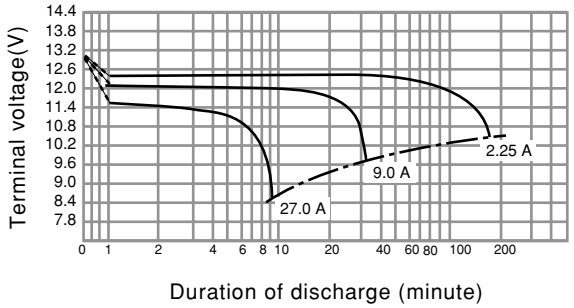

Duration of discharge vs. Discharge current (Note)

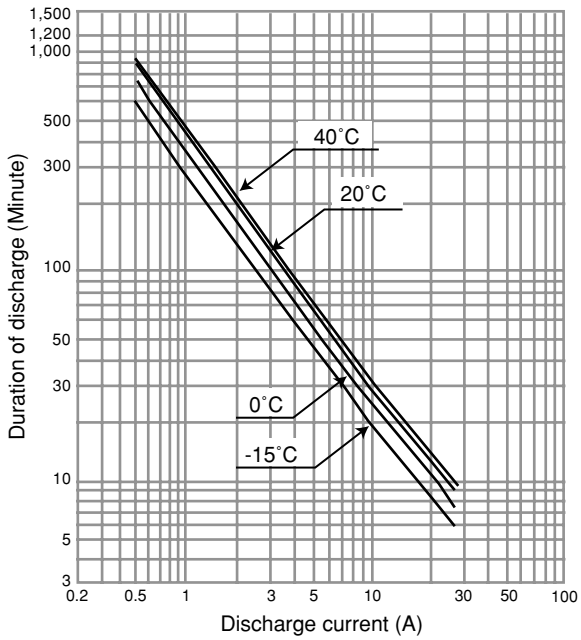

Product Standards

Alarm security market / VdS approved batteries VdS

Pos	Model	Voltage	Capacity	VdS No.	Factory	Remark
1	LC-R121R3P	12 V	1,3 Ah	G196049	China	
2	LC-R122R2P	12 V	2,2 Ah	G188151	China	
3	LC-R123R4P	12 V	3,4 Ah	G191053	China	
4	LC-R127R2P	12 V	7,2 Ah	G193046	China	
5	LC-RA1212P	12 V	12 Ah	G100001	China	
6	LC-XD1217P/AP	12 V	17 Ah	G104101	China	
7	LC-X1224P/AP	12 V	24 Ah	G198049	China	
8	LC-X1238P/AP	12 V	38 Ah	G100002	China	
9	LC-X1265P	12 V	65 Ah	G199090	China	

UL Standard

Our VRLA batteries fall into UL 1989 (Standby Batteries). UL 1989 requires that the battery is free from the hazard of bursting, that is, when the battery is overcharged the vent valve opens to release internal pressure.

JIS (Japan Industrial Standard)

Our small sized VRLA batteries comply with JIS C 8702.

EN 60896-2

Factory Standards

ISO 9002
ISO 14001

The Quality System and the Environmental Management System at our palants were recognized and registered as conforming to ISO.

Other appliable Standards

EN 50272-2
DIN VDE 0510, Part 2
GOST-R